Instruction Manual
90002929
04/2008

Instruction Manual

NGA 2000 Hardware Manual for MLT or CAT 200 Analyzer and MLT or CAT 200 Analyzer Module (combined with NGA 2000 Platform, MLT, CAT 200 or TFID Analyzer)

11th Edition 04/2008

ROSEMOUNT® Analytical

EMERSON™ Process Management

www.EmersonProcess.com

ESSENTIAL INSTRUCTIONS

READ THIS PAGE BEFORE PROCEEDING!

Emerson Process Management (Rosemount Analytical) designs, manufactures and tests its products to meet many national and international standards. Because these instruments are sophisticated technical products, you **MUST properly install, use, and maintain them** to ensure they continue to operate within their normal specifications. The following instructions **MUST be adhered to** and integrated into your safety program when installing, using and maintaining Emerson Process Management (Rosemount Analytical) products. Failure to follow the proper instructions may cause any one of the following situations to occur: Loss of life; personal injury; property damage; damage to this instrument; and warranty invalidation.

- **Read all instructions** prior to installing, operating, and servicing the product.
- If you do not understand any of the instructions, **contact your Emerson Process Management (Rosemount Analytical) representative** for clarification.
- **Follow all warnings, cautions, and instructions** marked on and supplied with the product.
- **Inform and educate your personnel in the proper installation, operation, and maintenance of the product**.
- **Install your equipment as specified in the Installation Instructions of the appropriate Instruction Manual and per applicable local and national codes**. Connect all products to the proper electrical and pressure sources.
- To ensure proper performance, **use qualified personnel** to install, operate, update, program, and maintain the product.
- When replacement parts are required, ensure that qualified people use replacement parts specified by Emerson Process Management (Rosemount Analytical). Unauthorized parts and procedures can affect the product's performance, place the safe operation of your process at risk, **and VOID YOUR WARRANTY**. Look-alike substitutions may result in fire, electrical hazards, or improper operation.
- **Ensure that all equipment doors are closed and protective covers are in place, except when maintenance is being performed by qualified persons, to prevent electrical shock and personal injury**.

The information contained in this document is subject to change without notice. Misprints reserved.

1st Edition 02/1997 *2nd Edition 03/1997* *3rd Edition 09/1997* *4th Edition 04/1998*
5th Edition 07/1999 *6th Edition 10/1999* *7th Edition 04/2003* *8th Edition 08/2004*
9th Edition 07/2006 *10th Edition 01/2007* 11th Edition 04/2008
© 1997-2008 by Emerson Process Management

Emerson Process Management
GmbH & Co. OHG
Industriestrasse 1
D-63594 Hasselroth
Germany
T +49 (0) 6055 884-0
F +49 (0) 6055 884-209
Internet: www.EmersonProcess.com

Cert. Reg. No. 254969 QM

EMERSON.
Process Management

Table of Contents

PREAMBEL ..... **S - 1**

DEFINITIONS ..... **S - 1**

SAFETY INSTRUCTIONS ..... **S - 2**
- **Operating and maintaining this apparatus** ..... S - 3
- **Intended use statement** ..... S - 4
- **Safety summary** ..... S - 4
- **Authorized personnel** ..... S - 4
- **Gases and Gas Conditioning (Sample Handling)** ..... S - 6
- **Power Supply** ..... S - 7
- Instruments with External Power Supply Unit ..... S - 7
- Instruments with Internal Power Supply Unit ..... S - 7
- **General operating instructions** ..... S - 9
- **Additional hints for UV measurement** ..... S - 10
- **Magnetically Operated Front Panel** ..... S - 11
- **Electrostatic Discharge** ..... S - 12

PREFACE ..... **P - 1**
- a) Analyzer versions ..... P - 1
  - Standard General Purpose Applications ..... P - 1
- b) Analyzer versions
  - Installation in Hazardous Areas ..... P - 2
- c) Analyzer System Architecture ..... P - 4

DESCRIPTION

1. Technical Description ..... **1 - 1**
1.1 Standard General Purpose Applications ..... 1 - 1
1.2 Installation in Hazardous Areas ..... 1 - 1
1.3 Operating Front Panel ..... 1 - 2
1.3.1 Standard Version ..... 1 - 2
1.3.2 Magnetically Operated Touch Panel ..... 1 - 3
1.3.2.1 Magnetic Touch Panel Elements ..... 1 - 3
1.3.2.2 Accessories ..... 1 - 4
1.3.2.3 Operating the Touch Panel ..... 1 - 4

1.4 MLT 1 ..... 1 - 6
1.4.1 MLT 1 1/2 19" housing ..... 1 - 6
1.4.2 MLT 1 ULCO ..... 1 - 11
1.4.3 MLT 1 Housing for platform mounting ..... 1 - 13
1.5 MLT 2 (Field Housing) ..... 1 - 17
1.6 MLT 3 ..... 1 - 21
1.6.1 MLT 3 (Gas purity measurement) ..... 1 - 23
1.6.2 MLT 3HT (high temperature measurement) ..... 1 - 24
1.7 MLT 4 ..... 1 - 26
1.8 CAT 200 ..... 1 - 28
1.9 Internal Gas Paths ..... 1 - 32
1.9.1 Gas Path Material ..... 1 - 32
1.9.2 Gas Path Layout (internal tubing) ..... 1 - 33
1.9.3 MLT 3 (gas purity measurement) ..... 1 - 34
1.10 Printed Circuit Boards ..... 1 - 36
1.10.1 ICB (Inter-Connection Board) ..... 1 - 37
1.10.2 PSV/PIC Combination ..... 1 - 37
1.10.3 DSP (alternitavely to PSV/PIC Combination) ..... 1 - 37
1.10.4 PIC (Physics Interface Card) ..... 1 - 38
1.10.5 Digital Signal Processing Card (DSP) ..... 1 - 39
1.10.6 ACU ..... 1 - 40
1.10.7 SIO (Standard Inputs-/Outputs) ..... 1 - 41
1.10.8 DIO (Digital In-/Outputs) ..... 1 - 42
1.11 Network Termination ..... 1 - 43
1.12 Specifications at the Nameplate Label ..... 1 - 44
1.13 MLT 2HT (high temperature measurement) ..... 1 - 46

2. Measuring Principle ..... 2 - 1
2.1 IR Measurement ..... 2 - 1
2.1.1 Opto - Pneumatic Measuring Principle ..... 2 - 3
2.1.2 Interference Filter Correlation (IFC Principle) ..... 2 - 4
2.2 UV Measurement ..... 2 - 6
2.3 Oxygen Measurement ..... 2 - 7
2.3.1 Paramagnetic Measurement (PO_2) ..... 2 - 7
2.3.2 Electrochemical Measurement (EO_2) ..... 2 - 11
2.3.3 Trace Electrochemical Measurement (TEO_2) ..... 2 - 13
2.4 Thermal Conductivity ..... 2 - 15
2.4.1 Sensor Design ..... 2 - 15
2.4.2 Analysis Cell ..... 2 - 15
2.4.3 Measurement Method ..... 2 - 16

3. (vacant)
4. (vacant)

OPERATION (START-UP)

5. Installation ..... 5 - 1
5.1 General ..... 5 - 1
5.1.1 Transfer Safety Lock of MLT 1/ULCO or MLT 2 ..... 5 - 3
5.2 Gas Conditioning (Sample Handling) ..... 5 - 4
5.2.1 Fine Dust Filter (Option MLT 3) ..... 5 - 5
5.2.2 Gas Sampling Pump (Option MLT 3) ..... 5 - 5
5.2.3 Pressure Sensor (Option) ..... 5 - 5
5.2.4 Gas Flow ..... 5 - 5
5.3 Gas Connections ..... 5 - 6
5.3.1 Internal Solenoid Valve Block (Option for MLT 1/CAT 200) ..... 5 - 8
5.3.2 Purge Gas Connections ..... 5 - 8
5.4 Analyzer Specific Instructions ..... 5 - 9
5.4.1 MLT 1 ..... 5 - 9
5.4.1.1 MLT 1, platform mounting only ..... 5 - 9
5.4.1.2 MLT 1, external installation and 1/2-19" Housing ..... 5 - 10
5.4.2 MLT 2 (Field Housing) ..... 5 - 13
5.4.2.1 Wall Mounting ..... 5 - 13
5.4.2.2 Electrical Connections ..... 5 - 15
a) Mains Supply ..... 5 - 16
b) optional Data Lines ..... 5 - 16
c) Cable Gland Assembly Instruction for Shielded Cables ..... 5 - 19
d) Gas Connections ..... 5 - 20
5.4.3 MLT 3 ..... 5 - 21
5.4.3.1 MLT 3 for gas purity measurement ..... 5 - 22
a) Instrument with manual 4/2-way-valve ..... 5 - 22
b) Instrument with solenoid valve block ..... 5 - 23
c) Instrument with quick shutoff connector ..... 5 - 23
5.4.4 MLT 4 ..... 5 - 24
5.4.5 CAT 200 ..... 5 - 26
5.4.5.1 Wall Mounting ..... 5 - 27
5.4.5.2 Electrical Connections ..... 5 - 28
5.4.5.3 Gas Connections ..... 5 - 31
5.5 Wiring Signal Terminals ..... 5 - 32
5.5.1 Electrical Connections in General ..... 5 - 32
5.5.2 Wiring Inductive Loads ..... 5 - 34
5.5.3 Driving Multiple Loads ..... 5 - 35
5.5.4 Driving High Current Loads ..... 5 - 36

6. Switching On ..... 6 - 1

7. Measurement / Calibration / Switching Off ..... 7 - 1
7.1 Measurement ..... 7 - 1
7.2 Calibration ..... 7 - 2
7.2.1 Test Gases ..... 7 - 3
7.2.1.1 Zero Gas ..... 7 - 3
7.2.1.2 Span Gas ..... 7 - 3
7.3 Switching Off ..... 7 - 4

8.
- (vacant)
9.

TROUBLESHOOTING

10. Troubleshooting ..... 10 - 1
10.1 Instrument has no function (LCD display is dark) ..... 10 - 1
10.2 No / Incorrect Measurement Screen ..... 10 - 2
10.3 Display Messages ..... 10 - 3
10.3.1 Chopper Fail ..... 10 - 3
10.3.2 Raw Signal Too High / Low ..... 10 - 3
10.3.3 Detector signal communication failed ..... 10 - 4
10.3.4 Light source ..... 10 - 4
10.3.5 Detector ..... 10 - 4
10.3.6 Heater Unit Regulation ..... 10 - 5
10.3.7 Temperature Measurement ..... 10 - 5
10.3.8 Invalid Pressure Measurement ..... 10 - 5
10.3.9 External Input ..... 10 - 6
10.4 No or incorrect Analog Outputs / Digital I/O's ..... 10 - 6
10.5 Calibration not possible ..... 10 - 7
10.6 Fluctuating or erroneous display ..... 10 - 8
10.7 Response time too long (t90 time) ..... 10 - 9

11. Test Procedure / Test Points ..... 11 - 1
11.1 Signal processing ..... 11 - 1
11.1.1 Internal Voltage Supply ..... 11 - 2
11.1.2 IR Source ..... 11 - 2
11.1.3 Chopper ..... 11 - 3
11.1.4 Unamplified Measuring Signal at Detector ..... 11 - 3
11.1.5 Signal Processing on PCB “PSV” ..... 11 - 4
11.1.6 Physical Zero Alignment ..... 11 - 5
11.1.6.1 IR Measurement ..... 11 - 5
11.1.6.2 Paramagnetic Oxygen Measurement ..... 11 - 5
11.1.6.3 Electrochemical Oxygen Measurement (EO2) ..... 11 - 5
11.2 Heating Unit ..... 11 - 6
11.3 Troubleshooting Instructions for PCB DSP01 ..... 11 - 7
11.3.1 Inspection of LEDs on component side of DSP01 ..... 11 - 8
11.3.2 Inspection of soldering pads of DSP01 ..... 11 - 10
11.3.3 Evaluation ..... 11 - 11
11.3.4 Appendix ..... 11 - 12
11.3.4.1 Description of soldering pad DEF (LB3): ..... 11 - 12
11.3.4.2 Definition of LEDs: ..... 11 - 12

12. Removal / Replacement of Components ..... 12 - 1
12.1 Removal / Replacement of PCBs (in preparation) ..... 12 - 1
12.1.1 Rear Mounting Slots (in preparation) ..... 12 - 1
12.1.2 Internal Slots (in preparation) ..... 12 - 1
12.2 Removal / Replacement of Operation Front Panel ..... 12 - 2
12.3 Replacement of Buffer Battery on the ACU 02 ..... 12 - 3
12.3.1 Removal of ACU 02 ..... 12 - 3
12.3.2 Replacement of Buffer Battery ..... 12 - 4
12.3.3 Installation of ACU 02 ..... 12 - 4
12.4 Fuses ..... 12 - 5
12.4.1 MLT 2 ..... 12 - 5
12.4.2 MLT 1 / 4 ..... 12 - 6
12.5 Connect/Disconnect UV Source/Power Supply for UV Source ..... 12 - 7

MAINTENANCE ..... 13 - 1

14. Leak Testing ..... 14 - 1

15. Opening the Housing ..... 15 - 1
15.1 MLT 1 ..... 15 - 2
15.1.1 MLT 1 (Platform housing) ..... 15 - 2
15.1.1.1 Housing Cover ..... 15 - 2
15.1.1.2 Front Panel ..... 15 - 3
15.1.2 MLT 1 (1/2 19" housing) ..... 15 - 4
15.1.2.1 Housing Cover ..... 15 - 4
15.1.2.2 Front Panel ..... 15 - 5
15.2 MLT 2 (Field Housing) ..... 15 - 6
15.3 MLT 3/4 (1/1 19" housing) ..... 15 - 8
15.3.1 Housing Cover ..... 15 - 8
15.3.2 Front Panel (MLT 4 / MLT 3 standard version) ..... 15 - 8
15.3.3 Front Panel (MLT 3 gas purity measurement) ..... 15 - 9
15.3.3.1 Operation Front Panel ..... 15 - 9
15.3.3.2 Left Front Panel ..... 15 - 9
15.4 CAT 200 ..... 15 - 10
15.4.1 Junction Box ..... 15 - 12
15.4.2 Dome ..... 15 - 13
15.4.3 Magnetically Operated Front Panel ..... 15 - 16
15.4.3.1 Sliding the Analyzer into Position ..... 15 - 16
15.4.3.2 Fixing the Analyzer ..... 15 - 16
15.4.3.3 Completing the Adjustment ..... 15 - 16

16. Fine Dust filter (MLT 3 Option) ..... 16 - 1

17. Replacement and Cleaning of Photometric Components ..... 17 - 1
17.1 Removal of the Photometer Assembly ..... 17 - 2
17.2 Light Source Replacement (IR) ..... 17 - 3
17.3 Cleaning of Analysis Cells and Windows ..... 17 - 4
17.3.1 Removal of Analysis Cells ..... 17 - 4
17.3.2 Cleaning ..... 17 - 5
17.3.3 Reinstalling of Analysis Cells ..... 17 - 6
17.4 Reinstalling of the Photometer Assembly ..... 17 - 7
17.5 Physical Zeroing ..... 17 - 8

18. Check / Replacement of electrochemical Oxygen Sensor ..... 18 - 1
18.1 EO_2-Sensor ..... 18 - 2
18.2 Check of the EO_2-Sensor ..... 18 - 3
18.3 Replacement of the EO_2-Sensor ..... 18 - 4
18.3.1 Removal of the EO_2-Sensor ..... 18 - 4
18.3.2 Replacing the EO_2-Sensor ..... 18 - 5
18.3.3 Reinstalling of the EO_2-Sensor ..... 18 - 5
18.3.4 Basic conditions for the EO_2-Sensor ..... 18 - 6
18.4 TEO_2-Sensor ..... 18 - 7

19. Cleaning of Housing Outside ..... 19 - 1

TECHNICAL DATA ..... 20 - 1
20.1 Housing ..... 20 - 1
20.2 Options ..... 20 - 2
20.3 General Specifications ..... 20 - 3
20.4 Voltage supply ..... 20 - 11
20.4.1 Analyzers ..... 20 - 11
20.4.1.1 MLT 1/4 ..... 20 - 11
20.4.1.2 MLT 2/3 ..... 20 - 11
20.4.1.3 CAT 200 ..... 20 - 11
20.4.1.4 Electrical Safety ..... 20 - 11
20.4.2 Power Supplies ..... 20 - 12
20.4.2.1 UPS 01 T (Universal Power Supply) ..... 20 - 12
20.4.2.2 External 5A Power Supply Unit for DIN Rail Installation ..... 20 - 14
20.4.2.3 External 10A Power Supply Unit for DIN Rail Installation ..... 20 - 16
20.4.2.4 Tabletop Power Supply Units ..... 20 - 18

SUPPLEMENT

21. Pin Assignments ..... 21 - 1
21.1 24 V dc Input (MLT 1/4) ..... 21 - 1
21.2 230/120 V ac Input (MLT 3) ..... 21 - 1
21.3 Option SIO (Standard I/O) ..... 21 - 2
21.3.1 Analog Signal Outputs ..... 21 - 2
21.3.2 Relay Outputs / Serial Interfaces ..... 21 - 2
21.4 Option DIO (Digitale I/O) ..... 21 - 3
21.5 Terminal Assignment of CAT 200 ..... 21 - 4
21.6 CAT 200 Increased Safety Box - Label Schematic ..... 21 - 7

22. Calculation of Water Content from Dew-point to Vol. -% or g/Nm³ ..... 22 - 1

LIST OF FIGURES

Fig.	Title	Page
Fig. P-1:	Analyzer Nameplate Label (example)	P - 3
Fig. P-2:	From separate analyzers to analyzer system	P - 4
Fig. P-3:	Example of NGA-cabling	P - 5
Fig. P-4:	Example/possibilities of NGA analyzer system	P - 6
Fig. 1-1:	Operation front panel, Front view	1 - 2
Fig. 1-2:	Magnetically Operated Touch Panel, Front view	1 - 3
Fig. 1-3a:	Magnetic actuator	1 - 5
Fig. 1-3b:	Magnetic actuator, view at magnets	1 - 5
Fig. 1-4a:	Symbols showing actuator alignment	1 - 4
Fig. 1-4b:	Horizontally aligned, activating F4	1 - 5
Fig. 1-4c:	Vertically aligned, activating F5	1 - 5
Fig. 1-5:	Actuator stored when not in use	1 - 4
Fig. 1-6:	MLT analyzer, Front view	1 - 6
Fig. 1-7:	MLT 1, Front panel, Rear view	1 - 7
Fig. 1-8:	MLT 1, Rear panel (standard)	1 - 7
Fig. 1-9:	MLT 1, Rack/Table-top Housing, Top view (with electrochemical O_2 Sensor)	1 - 8
Fig. 1-10:	MLT 1, Rack/Table-top Housing, Top viewA(with paramagnetic O_2 Sensor)	1 - 9
Fig. 1-11:	MLT 1, Rack/Table-top Housing extended, Top view (with paramagnetic O_2 Sensor)	1 - 10
Fig. 1-12:	MLT 1 ULCO, Rack/Table-top Housing, Top view	1 - 12
Fig. 1-13:	MLT 1 Analyzer module (Platform mounting), Front panel, Front view	1 - 13
Fig. 1-14:	MLT 1, Platform mounting, Top view (with electrochemical O_2 Sensor)	1 - 14
Fig. 1-15:	MLT 1, Platform mounting, Top view (with paramagnetical O_2 Sensor)	1 - 15
Fig. 1-16:	MLT 1, Platform mounting extended, Top view (with paramagnetic O_2 Sensor)	1 - 16
Fig. 1-17a:	Front view MLT 2 (Standard housing/Standard operation front panel)	1 - 19
Fig. 1-17b:	Front view MLT 2 (Dual compartment housing/Standard operation front panel)	1 - 19
Fig. 1-18a:	MLT 2, Inside view (drawing without front panel)	1 - 20
Fig. 1-18b:	MLT 2, Photometer sliding carriage, Top view	1 - 20
Fig. 1-19:	MLT 3 (standard) (1/1 19" housing), front view	1 - 21
Fig. 1-20:	MLT 3 (standard version), Rear view	1 - 21
Fig. 1-21:	MLT 3 (standard version), Top view	1 - 22
Fig. 1-22:	MLT 3 (gas purity measurement), front view	1 - 23
Fig. 1-23:	MLT 3 (gas purity measurement), Rear view	1 - 24
Fig. 1-24:	MLT 3 (gas purity measurement), Top view	1 - 25
Fig. 1-25:	MLT 4 (1/1 19" housing), front view	1 - 26
Fig. 1-26:	MLT 4, Rear view	1 - 26
Fig. 1-27:	MLT 4, Rack/Table-top Housing, Top view	1 - 27
Fig. 1-28:	CAT 200, Exterior view	1 - 30
Fig. 1-29:	CAT 200 (Dome and extender housing removed)	1 - 31
Fig. 1-30a:	MLT 3 (gas purity measurement), gas path layout (3 measuring channels with solenoid valve block option)	1 - 34
Fig. 1-30b:	MLT 3 (gas purity measurement), gas path layout (3 measuring channels with valve block option and quick shuttoff connector option)	1 - 35
Fig. 1-30c:	MLT 3 (gas purity measurement), gas path layout (2 measuring channels with manual 4/2-way-valve option)	1 - 35
Fig. 1-31a:	Cardcage MLT 1/3/4, Top View	1 - 36
Fig. 1-31b:	PCB arrangement MLT 2 [Inside view, detail (without front panel)]	1 - 37

Fig.	Title	Page
Fig. 1-32:	Plug pin assignment PCB PIC	1 - 38
Fig. 1-33:	Plug pin assignment PCB DSP	1 - 39
Fig. 1-34:	Function blocks of SIO-PCB	1 - 41
Fig. 1-35:	SIO-PCB with extension cards	1 - 42
Fig. 1-36:	RJ 45 network termination connector	1 - 43
Fig. 1-37:	Network termination (examples)	1 - 43
Fig. 1-38:	Analyzer Nameplate Label (example)	1 - 44
Fig. 2-1:	Measuring Principle for NDIR / UV Measurement	2 - 2
Fig. 2-2:	Principle Design of Gas Detector	2 - 3
Fig. 2-3:	Absorption Bands of Sample Gases and Transmittance of the Interference Filters used	2 - 5
Fig. 2-4:	Principle Construction of paramagnetic Analysis Cell	2 - 8
Fig. 2-5:	Structure of electrochemical Oxygen Sensor	2 - 11
Fig. 2-6:	Reaction of galvanic cell	2 - 12
Fig. 2-7:	Structure of electrochemical Trace Oxygen Sensor	2 - 13
Fig. 2-8:	Sensor block (thermal conductivity detector TCD)	2 - 15
Fig. 2-9:	Measuring principle Thermal Conductivity Sensor (Wheatstone bridge)	2 - 16
Fig. 5-1a:	Transfer safety lock MLT-ULCO (housing side view, detail sketch)	5 - 3
Fig. 5-1c:	MLT 2, Photometer safety lock	5 - 3
Fig. 5-1b:	MLT 1, Rear panel (holder for safety lock)	5 - 3
Fig. 5-2:	MLT, Bypass installation	5 - 7
Fig. 5-3:	MLT 1 analysis module (platform mounting), front panel, front view	5 - 9
Fig. 5-4:	MLT 1, standard gas connections	5 - 11
Fig. 5-5:	MLT 1, gas connections with solenoid valve option	5 - 12
Fig. 5-6a:	Dimensional sketch / Drill drawing MLT 2 Standard version	5 - 14
Fig. 5-6b:	Dimensional sketch / Drill drawing MLT 2 Dual housing version	5 - 14
Fig. 5-8:	MLT 2, Data line connections Inside view from front (detail, without front door)	5 - 17
Fig. 5-9:	MLT 2, Connection data lines / mains line (inside view, left side panel)	5 - 18
Fig. 5-10:	Cable Gland Assembly Instruction for Shielded Cables	5 - 19
Fig. 5-11:	Cable gland sealing plug / Cable gland allen screw sealing plug	5 - 19
Fig. 5-12a:	MLT 2, gas connections	5 - 20
Fig. 5-12b:	MLT 2, Gas fittings at analyzer’s bottom side	5 - 20
Fig. 5-13:	MLT 3 (standard version), gas connections and voltage supply	5 - 21
Fig. 5-14:	MLT 3 (gas purity measurement), Rear view	5 - 22
Fig. 5-15:	Solenoid valve block MLT 3 (gas purity measurement) (side view)	5 - 23
Fig. 5-16:	MLT 3 (gas purity measurement), front view	5 - 23
Fig. 5-17:	MLT 4, Voltage supply	5 - 24
Fig. 5-18:	MLT 4, gas connections	5 - 25
Fig. 5-19:	Drill drawing CAT 200 [all dimensions in mm (Inch)]	5 - 27
Fig. 5-20:	CAT 200, Junction box, interior view	5 - 30
Fig. 5-21:	CAT 200, Analyzer’s bottom view at gas fittings	5 - 30
Fig. 5-22:	Shielded Signal Cable, shield connected at both ends	5 - 32
Fig. 5-23:	Shielded Signal Cable, shield connected at one end	5 - 32
Fig. 5-24:	Double-shielded Signal Cable, shields connected at both sides	5 - 33
Fig. 5-25:	Suppressor Diode for Inductive Loads	5 - 34
Fig. 5-26:	”Serial” Wiring	5 - 35
Fig. 5-27:	Running Supply Lines "Parallel”	5 - 35
Fig. 5-28:	Driving High Current Loads	5 - 36

Fig.	Title	Page
Fig. 11-1:	Principle signal processing with PCB "PSV"	11 - 1
Fig. 11-2:	PCB "VVS"	11 - 2
Fig. 11-3:	PCB "MOP” (partial view)	11 - 3
Fig. 11-4:	PCB "BHZ” (position of signal LED's / heating transistors)	11 - 6
Fig. 11-5:	PCB "DSP01”	11 - 7
Fig. 11-6:	LEDs on component side of PCB "DSP01”	11 - 8
Fig. 11-6a:	LEDs “V7” and “V9” (PCB "DSP01”)	11 - 8
Fig. 11-6b:	LEDs “V3” and “V4” (PCB "DSP01”)	11 - 9
Fig. 11-6c:	LEDs “V12” to “V17”, Jumper “P40” (PCB "DSP01”)	11 - 9
Fig. 11-7:	Soldering pads on soldering side of PCB "DSP01”	11 - 10
Fig. 11-7a:	Soldering pad “LB1” and “LB2 (PCB "DSP01”)	11 - 10
Fig. 11-7b:	Soldering pad “LB18” (PCB "DSP01”)	11 - 10
Fig. 11-8:	Schematic diagram of inspection of PCB "DSP01”	11 - 11
Fig. 11-9:	Soldering pad “DEF/LB3” (PCB "DSP01”)	11 - 12
Fig. 12-1:	Controller Board ACU (partial view, component side)	12 - 3
Fig. 12-2:	Fuses MLT 2 (partial inside view, drawing without front panel)	12 - 5
Fig. 12-3a:	Fuses PCB LEM 01 (component side)	12 - 6
Fig. 12-3a:	Fuses PCB LEM 01 (component side)	12 - 6
Fig. 12-4a:	Power Supply for UV Source (front view, front panel disassembled)	12 - 8
Fig. 12-4b:	UV Source and PCB ESP10 (top view, housing cover disassembled)	12 - 9
Fig. 14-1:	Leak Testing with an U - Tube - Manometer	14 - 1
Fig. 15-1:	MLT 1 (Plattform housing) Fastening screws housing cover	15 - 2
Fig. 15-2:	MLT 1 (Plattform housing) Fastening screws front panel	15 - 3
Fig. 15-3:	MLT 1 (1/2 19" housing) Fastening screws housing cover	15 - 4
Fig. 15-4:	MLT 1 (1/2 19" housing) Fastening screws front panel	15 - 5
Fig. 15-5:	MLT 2 (Field housing) fastener for front panel	15 - 7
Fig. 15-6:	MLT 2, photometer carriage slide	15 - 7
Fig. 15-7:	MLT3 (standard version) / MLT 4 (1/1 19" housing) Fastening screws front panel	15 - 8
Fig. 15-8:	MLT3 (gas purity measurement) (1/1 19" housing) Fastening screws front panel	15 - 9
Fig. 15-9:	Cat 200 Enclosure Assembly	15 - 11
Fig. 15-10:	Cat 200 Junction box	15 - 12
Fig. 15-11:	CAT 200 Dome, fixing screws	15 - 13
Fig. 15-12:	View at analyzer module	15 - 14
Fig. 15-13:	Plate with detents	15 - 14
Fig. 15-14:	CAT 200, Cast Iron housing, Interior View	15 - 15
Fig. 17-1:	Photometer Assembly, example (Top view, detail)	17 - 2
Fig. 17-2:	Chopper Housing with IR light sources	17 - 3
Fig. 17-3:	Photometer Assembly (1 mm to 10 mm analysisi cells)	17 - 4
Fig. 17-4:	Photometer Assembly (30 mm to 200 mm analysisi cells)	17 - 4
Fig. 18-1:	PCB “OXS”, assembled, horizontal projection	18 - 3
Fig. 18-2:	MLT 1, front panel, rear view	18 - 4
Fig. 18-3:	PCB “OXS”, assembled, horizontal projection	18 - 6

Fig.	Title	Page
Fig. 20- 1:	Dimensional sketch MLT 1 [all dimensions in mm]	20 - 6
Fig. 20- 2:	Dimensional sketch / Drill drawing MLT 2 Standard version	20 - 7
Fig. 20- 3:	Dimensional sketch / Drill drawing MLT 2 Dual housing version	20 - 7
Fig. 20- 4:	Dimensional sketch MLT 2 for Ex Zone 2 in standard housing	20 - 8
Fig. 20- 5:	Dimensional sketch MLT 2 for Ex Zone 1 in standard housing	20 - 8
Fig. 20- 6:	Dimensional sketch MLT 2 for Ex Zones with “Z Purge” (MLT 2-NF) or “Continuous purge” in standard housing	20 - 9
Fig. 20- 7:	Dimensional sketch MLT 3/4	20 - 9
Fig. 20- 8:	Dimensional sketch / Drill drawing CAT 200	20 - 10
Fig. 20- 9:	Dimensional sketch UPS 01 T (Universal Power Supply), table-top version	20 - 13
Fig.20-10a:	IEC mains input plug (UPS 01 T)	20 - 13
Fig. 20-10b:	24 V DC output socket, Pin assignment (UPS 01 T)	20 - 13
Fig. 20-11:	Power Supply SL5, Dimensions	20 - 15
Fig. 20-12:	Power Supply SL 10, Dimensions	20 - 17
Fig. 20-13:	10 A Tabletop Power Supply, Dimensions	20 - 18
Fig. 21- 1:	Pin assignments 24 V dc Input (MLT 1/4)	21 - 1
Fig. 21- 2:	Pin assignments 230/120 V ac Input (MLT 3)	21 - 1
Fig. 21- 3:	Pin assignments Socket Analog Signal Outputs (Option SIO)	21 - 2
Fig. 21-4a:	Pin assignments Socket Relay Outputs / RS 232 Serial Interface (Option SIO)	21 - 2
Fig. 21-4b:	Pin assignments Socket Relay Outputs / RS 485 Serial Interface (Option SIO)	21 - 2
Fig. 21- 5:	Pin assignments Socket Digital Inputs/Outputs (Option DIO)	21 - 3
Fig. 21- 6:	CAT 200, Junction box, interior view	21 - 4

LIST OF TABLES

Table	Title	Page
Table P-1:	Possibilities of NGA 2000 MLT I/O combinations	P - 7
Table 1-1:	Possible internal tubings (examples with 3 measuring channels)	1 - 33
Table 2-1:	Solvent Resistant Sensor: Approved solvents	2 - 9
Table 2-2:	Medium affected Materials within Paramagnetic Oxygen Sensor	2 - 9
Table 2-3:	Paramagnetic Oxygen Measurement, cross interference by accompanying gases	2 - 10
Table 5-1:	CAT 200, Assignment of gas fittings	5 - 30
Table 11-1:	Definition of LEDs/Default configuration of soldering pads (PCB "DSP01”)	11 - 12
Table 11-2:	Definition of LEDs/Normal configuration of soldering pads (PCB "DSP01”)	11 - 13
Table 20-1:	Specifications of MLT	20 - 4
Table 20-2:	Altered NDIR/VIS/UV-Specifications of MLT-ULCO compared to table 1	20 - 5
Table 21-1:	CAT 200 Power Connections Terminal Assignments	21 - 5
Table 21-2:	CAT 200 Analog Signal Outputs Terminal Assignments (Option SIO)	21 - 5
Table 21-3:	CAT 200 Relay Outputs Terminal Assignments (Option SIO)	21 - 5
Table 21-4:	CAT 200 Field Bus Terminal Assignments (Option)	21 - 5
Table 21-5:	CAT 200 RS 232 / RS 485 Serial Interface Terminal Assignments (Option SIO)	21 - 6
Table 21-6:	CAT 200 Digital Inputs/Outputs Terminal Assignments (Option DIO)	21 - 6
Table 21-7:	CAT 200 Terminal Assignments - Bottom (Lower) Contacts	21 - 8
Table 21-8:	CAT 200 Terminal Assignments - Top (Upper) Contacts	21 - 8
Table 22-2:	Calculation of Water Content from Dew-point to Vol. -% or g/Nm³	22 - 1

Preambel

This instruction manual provides information about MLT and CAT200 series gas analyzers /analyzer modules concerning subassemblies, functions, procedures, installation, operation and maintenance.
This instruction manual covers several MLT and CAT200 series gas analyzers /analyzer modules variations and therefore may describe configurations and/or options not part of your specific analyzer.
Installation and operation of instruments intended to be installed and operated in HAZARDOUS AREAS is NOT COVERED by this instruction manual, but part of the specific instruction manual shipped together with such analyzers because of the special requirements for working in hazardous environments!

Definitions

The following definitions apply to WARNINGS, CAUTIONS and NOTES found throughout this publication.

WARNING

Highlights an operation or maintenance procedure, practice, condition, statement, etc.

If not strictly observed, could result in injury, death, or long-term health hazards of personnel.

CAUTION

Highlights an operation or maintenance procedure, practice, condition, statement, etc.

If not strictly observed, could result in damage to or destruction of equipment, or loss of effectiveness.

NOTE

Highlights an essential operating procedure, condition or statement.

IMPORTANT

SAFETY INSTRUCTIONS

WIRING AND INSTALLATION OF THIS APPARATUS

The following safety instructions apply specifically to all EU member states. They should be strictly adhered to in order to assure compliance with the Low Voltage Directive. Non-EU states should also comply with the following unless superseded by local or National Standards.

1. Adequate earth connections should be made to all earthing points, internal and external, where provided.
2. After installation or troubleshooting, all safety covers and safety grounds must be replaced. The integrity of all earth terminals must be maintained at all times.
3. To ensure safe operation of this equipment, connection to the mains supply should only be made through a circuit breaker which will disconnect all circuits carrying conductors during a fault situation. The circuit breaker may also include a mechanically operated isolating switch. Circuit breakers or switches must comply with a recognized standard such as IEC947. All wiring must conform with any local standards.
4. Where equipment or covers are marked with the symbol to the right, hazardous voltages are likely to be present beneath. These covers should only be removed when power is removed from the equipment — and then by trained service personnel only.

5. Where equipment or covers are marked with the symbol to the right, there is a danger from hot surfaces beneath. These covers should only be removed by trained service personnel when power is removed from the equipment. Certain surfaces may remain hot to the touch.

6. Where equipment or covers are marked with the symbol to the right, refer to the Instruction Manual for instructions.

7. Further graphical symbols used in this product:

Elektrostatic discharge (ESD)

Explosion Hazard!

Heavy Instrument!

Harmful (to Health)!

Toxic!

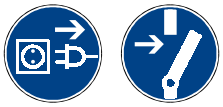

Disconnect from Mains!

All graphical symbols used in this product are from one or more of the following standards: EN61010-1, IEC417, and ISO3864.

Operating and maintaining this apparatus

This instrument has left the factory in compliance with all applicable safety regulations.
To maintain this operating condition, the user must strictly follow the instructions and consider the warnings in this manual or provided on the instrument.

Before switching on the instrument, verify that the electrical supply voltage matches the instrument´s operating voltage as set in the factory.

Any interruption in the instrument´s ground line, whether inside or outside the instrument, or removal or interruption of its ground line connection, could result in hazardous operating conditions. Intentionally interrupting the instrument´s protective ground is strictly prohibited.

Opening cover panels could expose voltage-carrying components. Connectors may also be under voltage. The instrument must be disconnected from all electrical supplies before attempting any calibrations, maintenance operations, repairs or component replacements requiring opening of the instrument. Any calibrations, maintenance operations, or repairs that need the instrument to be opened while connected to electrical supplies should be subject to qualified technicians familiar with the hazards involved only!

Use only fuses of the correct type and current ratings as replacements. Using repaired fuses and short circuiting of fuse holders is prohibited.

Observe all applicable regulations when operating the instrument from an auto-transformer or variac.

Substances hazardous to health may emerge from the instrument‘s exhaust.
Please pay attention to the safety of your operation personnel. Protective measures must be taken, if required.

Intended use statement

MLT and CAT200 series gas analyzers/analyzer modules are intended to be used as analyzers for industrial purposes. They must not be used in medical, diagnostic or life support applications, and no independent agency certifications or approvals are to be implied as covering such applications!

Safety summary

If this equipment is used in a manner not specified in these instructions, protective systems may be impaired.

Authorized personnel

To avoid loss of life, personal injury and damage to this equipment and on-site property, do not operate or service this instrument before reading and understanding this instruction manual and receiving appropriate training. Save these instructions.

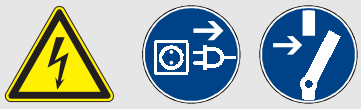

WARNING

ELECTRICAL SHOCK HAZARD !

Do not operate without covers secure. Do not open while energized. Installation requires access to live parts which can cause death or serious injury.

For safety and proper performace this instrument must be connected to a properly grounded three-wire source of power.

WARNING

TOXIC GASES !

This unit's exhaust may contain toxic gases such as sulfur dioxide. These gases can cause serious injuries.

Aviod inhalation of the exhaust gases at the exhaust fitting.

Connect exhaust outlet to a safe vent. Check vent line and connections for leakage.

Keep all fittings tight to avoid leaks. See section 14 for leak test information.

WARNING

EXPLOSION HAZARD !

Do not operate nor install these instruments in hazardous areas without additional measures!

CAUTION

MLT 2 and CAT 200 -- HEAVY INSTRUMENTS !

The analyzer variations MLT 2 and CAT 200 intended to be wall mounted and/or outdoor installed weigh up to 35 kg resp. 70 kg, depending on included options!

Use two person and/or suitable tools for transportation and lifting these instruments!

Take care to use anchors and bolts specified to be used for the weight of the units!

Take care the wall or stand the unit is intended to be installed at is solid and stable to hold the units!

CAUTION

HIGH TEMPERATURES !

While working at photometers and/or thermostated components inside the analyzers hot components may be accessible!

WARNING

CAUSTIC !

The electrochemical O_2-sensor contains electrolyte which is caustic and can cause serious burns to skin. Do not ingest contents of sensor !

CAUTION

Tampering with or unauthorized substitution of components may adversely affect the safety of this instrument. Use only factory approved components for repair.

Because of the danger of introducing additional hazards, do not perform any unauthorized modification to this instrument!

Gases and Gas Conditioning (Sample Handling)

WARNING

Take care of the safety instructions applicable for the gases (sample gases and test gases) and for the gas bottles containing these gases!

Before opening gas paths they must be purged with ambient air or neutral gas (N_2) to avoid hazards caused by toxic, flammable, explosive or harmful to health sample gas components!

Flammable gases must not supplied without additional protective measures!
It is prohibited to supply explosive gases!

WARNING

EXPLOSION HAZARD !

Supplying flammable gases of concentrations above 25 % of lower explosion limit (LEL) we recommend to utilize one or more of the following measures:

- **Purging the housing with inert gas**
- **Internal tubing with stainless steel**
- **Flame arrestors at gas input and output fittings**
- **Intrinsically safe paramagnetical or thermal conductivity sensors**

Supplying explosive gases is not permitted !

- Purge gas must be conditioned:
  Take care for purge gas temperature: Purge gas should have the same temperature as ambient temperature of the analyzer but NOT below 20 °C and above 35 °C! Otherwise it must be cooled or warmed up before let in into the instrument!
  Purge gas should be instrumental / synthetic air (free of oil, no corrosive, toxic or flammable gas componets) or nitrogen depending on application.

Power Supply

CAUTION

Verify the mains voltage at site of installation corresponds to the analyzer´s rated voltage as given on the nameplate label!

Verify the safety instruction given by power supply unit manufacturer !

Instruments with External Power Supply Unit

CAUTION

The mains socket has to be nearby the power supply unit and easily accessible! Disconnecting from mains requires unplugging the power plug!

To comply with the CE mark requirements use only power supply units of type UPS 01 T, DP 157, SL5, SL10 (DP 157 for rack installation only) or equivalent units. Equivalent units must provide SELV output voltages!

Verify proper polarity when connecting DC 24 V operated analyzers !

Instruments with Internal Power Supply Unit

WARNING

ELECTRICAL SHOCK HAZARD !

These instruments provide a protective earth terminal. To prevent electrical shock hazards the instrument must be connected to a protective earth. Therefore the instrument has to be connected to mains by using a three wire mains cable with earth conductor!

Any interruption of the earth connector inside or outside the instrument or disconnecting the earth terminal may cause potential electrical shock hazzard! Intended interruption of protective earth connections is not permitted!

- For analyzer module (A) [external installation or platform mounting] it is not allowed to supply the module from front and rear simultaneously !
  For external installation connections on frontside absolutely have to closed with the blind plate delivered from our factory to be in agreement with the CE conformity.

WARNING

ADDITIONAL HINTS FOR MODELS MLT 2 AND CAT 200

Installation and connecting mains and signal cables are subject to qualified personnel only taking into account all applicable standards and legislative requirements!

Failure to follow may cause warranty invalidation, property damage and/or personal injury or death! Mains and signal cables need to be connected to internal srew terminals requiring to work at open housing near life parts!

Installation of this instrument is subject to qualified personnel only, familiar with the resulting potential risks!

These gas analyzer do not provide a mains power switch and are operable when connected to power.

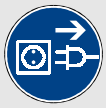

These gas analyzers do not provide a mains switch! A mains switch or circuit breaker has to be provided in the building installation. This switch has to be installed near by analyzer, must be easily operator accessible and has to be assigned as disconnector for the analyzer.

CAUTION

ADDITIONAL HINTS FOR MODEL MLT 2

Cables for external data processing must be double insulated for mains voltage when used inside the instrument!
If double insulation is not available signal cables inside the analyzer must be installed in a way that a distance of at least 5 mm is ensured permanently (e.g. by utilizing cable ties).

General operating instructions

WARNING

DANGER TO LIFE ! EXPLOSION HAZARD !

Verify all gas lines are connected as described within this manual and tight!

Improper gas connections may cause explosion, serious injury or death!

Exhaust may contain hydrocarbons and other toxic gases, e.g. carbon monoxide. Carbon monoxide is toxic!

- Before start-up unscrew transfer safety lock (knurled-head screws) of the MLT 1 + 2 (section 5. of operation manual) !
- Installation area has to be clean, free from moisture, excessive vibration and frost-protected. Take care to meet the permissible ambient temperatures as given in the technical data section!
  Instruments must not be exposed to direct sunlight, fluorescent lamps nor sources of heat.For outdoor installation it is recommended to mount the instruments into a cabinet. At least sheltering against rain is required. Do not cover venting openings and take care to mount the instrument in a distance to walls not affecting venting.
- Free flow of air into and out of the MLT (ventilation slits) must not be hindered by nearby objects or walls !
- Do not interchange gas inlet and outlet! All gases must be conditioned before supplying! When supplying corrosive gases ensure that gas path components are not affected!
- Max. permissible gas pressure: 1,500 hPa, except instruments for gas purity measurement (see chapter 5.4.3.1), with integrated valve blocks (see page 5-8 and/or paramagnetic Oxygen sensor (see table page 20-4)!!
- Exhaust lines must be installed in a descending way, need to be pressureless, frost-protected and in compliance with applicable legislative requirements!
- When it is necessary to open gas paths seal the analyzer‘s gas fittings by using PVC caps to avoid pollution of the internal gas path by moisture, dust, etc.
- To stay in compliance with regulations regarding electromagnetic compatibility it is recommended to use only shielded cables, as optionally available from Emerson Process Management or equivalent. Customer has to take care that the shield is connected in proper way. Shield and signal connector enclosure need to be conductively connected, submin-d plugs and sockets must be screwed to the analyzer.
- Using external submin-d-to-terminal adaptor elements (option) affects electromagnetic compatibility. In this case the customer has to take measures to stay in compliance and has to declare conformity, when required by legislation (e.g. European EMC Directive).

Additional hints for UV measurement

WARNING

HIGH VOLTAGE !

The optional UV lamp operates with high voltage (Power Supply UVS) !

WARNING

UV SOURCE !

Ultraviolet light from UV lamp can cause permanent eye damage !
Do not look directly at the ultraviolet source !

WARNING

TOXIC SUBSTANCE !

The optional UV lamp contains mercury. Lamp breakage could result in mercury exposure ! Mercury is highly toxic !

If the lamp is broken, avoid any skin contact to mercury and inhalation of mercury vapors !

Magnetically Operated Front Panel

WARNING

DANGER TO LIFE !

Persons with cardiac pacemakers should absolutely avoid magnetic fields !

Negative effects on persons beyond those described above caused by magnetic fields are not known. It is presumed that persons showing allergic reaction on contact with ceramic or metallic material show the same behavior on contact with magnetic material.

CAUTION

Permanent magnets are surrounded by magnetic fields. These magnetic fields can disturb and even destroy sensitive electronic measuring devices, but also mechanical watches, credit cards, etc.

Usually a distance of 0.5 m is enough to avoid damages. All sintered permanent magnets are hard and brittle. Hitting of sintered permanent magnets by the magnetic attraction causes splitting into fragments with many sharp edges. This especially occurs with high energy magnets, and can also cause skin bruises by high attraction.

High energy magnets made of rare-earth materials have to be stored dry, otherwise the surfaces would oxidise. Unprotected operation in a humid environment may cause corrosion. Avoid damaging the protective galvanic coating.

A storage in a hydrogen atmosphere destroys these magnets.
A demagnetisation is caused when permanent magnet materials have been exposed in a radioactive radiation for a long time.

For air transportation of magnetic material the IATA instructions have to be observed:

Magnetic fields are not allowed to penetrate the package, if necessary the magnets have to be shorted using a metal plate.

Electrostatic Discharge

CAUTION

The electronic parts of the analyzer can be irreparably damaged if exposed to electrostatic discharge (ESD).
The instrument is ESD protected when the covers have been secured and safety precautions observed. When the housing is open, the internal components are not ESD protected anymore.

Although the electronic parts are reasonable safe to handle, you should be aware of the following considerations:

Best ESD example is when you walked across a carpet and then touched an electrical grounded metal doorknob. The tiny spark which has jumped is the result of electrostatic discharge (ESD).

You prevent ESD by doing the following:

Remove the charge from your body before opening the housing and maintain during work with opened housing, that no electrostatic charge can be built up.

Ideally you are opening the housing and working at an ESD - protecting workstation.
Here you can wear a wrist trap.

However, if you do not have such a workstation, be sure to do the following procedure exactly:

Discharge the electric charge from your body. Do this by touching a device that is grounded electrically (any device that has a three - prong plug is grounded electrically when it is plugged into a power receptacle).
This should be done several times during the operation with opened housing (especially after leaving the service site because the movement on a low conducting floors or in the air might cause additional ESDs).

Preface

a) Analyzer versions - Standard General Purpose Applications

The MLT series of NGA 2000 analyzers offers multi-component, multi-method analysis. Different measurement methods can be combined in one analyzer.

MLT 1, MLT 2 and MLT 4 (MLT 5) are designed to measure up to 5 gas components while MLT 1 ULCO, MLT 3 and CAT 200 allow up to 4 gas components (including photometer and non-photometer channels).

For MLT (MLT 1, 2 & CAT 200) with Foundation Fieldbus (FF) a special FF instruction manual is provided.

NGA 2000 MLT 1 ULCO gas analyzer is specially designed to measure ultra low carbon monoxide. The analyzer is equipped with a 2nd optical bench including a multi detector assembly (MDA block) for cross interference compensation in automotive and flue gas applications. Water vapor and carbon dioxide measurement is used for internal cross interference compensation thus providing an ultra low CO and CO_2 channel as standard. This solution is designed for automotive (Internal Combustion Engine Emissions, ICEE) and Continuous Emissions Monitoring Systems (CEMS). An additional CO_{high} channel is available as option on automotive applications.
For gas purity measurement new quality standards require ultra low CO measurement but not such high dynamic ranging and cross compensation. Therefore the 2nd bench (MDA) is not used, but another channel, e.g. ultra low carbon dioxide ($ULCO_2$) can be implemented in MLT 1.

All MLT 2 components are incorporated into a wall-mountable housing with ingress protection code IP 65 (designed to meet NEMA 4/4X) according to EN 60529. This housing is equipped with an impact tested front panel according to EN 50014 operated by a magnetically operated touch panel. The MLT 2 can be purged to remove corrosive or toxic gases with synthetic air or instrumental air (dry, free of oil, hydrocarbons and corrosive components; 20 to 35 °C purge gas temperature). If sample gas contains flammable gas components above the lower explosion limit, the required explosion protection measures (purge/pressurization system) must be approved by an authorized person (ATEX/CSA-C/US purge system) .
MLT 2 is available with a dual compartment enclosure, too, whereat electronics and photometer/ sensors are installed in two separate housings.
Special high temperature variations of MLT 2 or 3 for physics temperatures up to 120 °C are optionally available (standard thermostat control: 55 °C; 65 °C as option).
Special versions of MLT 3 are available with suppressed ranges for gas purity measurements and a corresponding additional manual too (special sample handlingrequirements).

b) Analyzer versions - Installation in Hazardous Areas

Note!
This manual does not deal with special conditions for analyzers in hazardous areas, related to installation, operation, maintenance etc. ***For such applications refer to the separate instruction manuals, delivered together with the analyzers.*** For installation in **hazardous areas** the MLT 2 can be equipped with the appropriate pressurization system acc. to the actual required explosion protection measures.

Solutions acc. to **CENELEC** (according to former European EN 50016) use combinations of MLT 2 and an appropriate pressurization system being individually certified (see separate manual about pressurization system and individual certification report - §10 Elex).
In this case a magnetically operated touch panel or an intrinsically safe front panel (combined with approved PCB EXI 01for Zone 1, option for Zone 2) is implemented and MLT 2 is combined with a simplified pressurization for European Ex Zone 2 or with an approved pressurization system for European Ex Zone 1 (see separate instruction manual).
Additionally the MLT 2 may be equipped with intrinsically safe I/O's (see separate instruction manual)

MLT 2-NF is a special analyzer version of MLT 2 with Z Purge system for **North American** Class 1 Zone 2 measurements of non-flammable gases in hazardous areas (CSA-C/US type approved for Zone 2, see separate instruction manual).

EEx p solutions acc. to **ATEX** (European Directive for Equipment to be used in Explosive Atmospheres; mandatory since July 1, 2003) use type approved combinations of MLT 2 and appropriate pressurization systems (see separate ATEX instruction manual about pressurization system and certification). The separate ATEX manual covers all EExp Ex Zone 1 solutions as well as solutions for Ex Zone 2 measuring non-flammable gases. Solutions for measuring flammable gases in Ex Zone 1 or 2 are described in a separate instruction manual.
For installation acc. to ATEX in Ex Zone 1 and 2 the MLT 2 is always equipped with a magnetically operated touch panel (see separate manual too). Additionally the MLT 2 may be equipped with intrinsically safe I/O's (see separate instruction manual).

The CAT 200 analyzer or analyzer module is designed to be installed in hazardous areas, too, It is consisting of a 1/2-19" MLT 1 analyzer (analyzer module) installed into a flameproof Ex d enclosure with Ex em junction box. This model is CSA-C/US and ATEX approved for installation in North-American and European hazardous areas (Ex zone 1).

All analyzer versions are marked as follows:

MLTx y-CH1 CH2 CH3 CH4 CH5
with

x = analyzer type — 1, 2, 3, 4, 5, CAT 200 with
1 = 1/2 19", not thermostatted, external power supply
2 = Field housing, thermostatted, internal power supply
3 = 1/1 19"-housing, thermostatted, internal power supply
4 = 1/1 19"-housing, thermostatted, external power supply
5 = 19", 18 to 21 HU housing, thermostatted, internal power supply
CAT 200 = flameproof enclosure

y = analyzer version — T, M, A, R, TE, ME, AE, RE with
T = table top
M = analyzer module, platform mounting (net/electr. connections from front side only)
A = analyzer module, external installation or platform mounting (net/electr. connections from rear side or front side)
R = rack mounting
E = extended housing (MLT 1 only)

CH1...5 = measuring method of the individual (max. 5) measuring channels with
IR = measurement at infrared spectral range
UV = measurement at ultraviolet spectral range
VIS = measurement at visual spectral range
PO_2 = paramagnetic oxygen measurement
EO_2 = electrochemical oxygen measurement
TC = thermal conductivity measurement
TEO_2 = trace electrochemical oxygen measurement

Fig. P-1: Analyzer Nameplate Label (example)

c) Analyzer System Architecture

The MLT´s flexibility facilitates the most cost-effective system architecture - elegantly accommodating either “stand-alone” or integrated multi-channel analyzer requirements.
The MLT is available both as an “Analyzer Module” or as an “Analyzer”.

The “Analyzer Module” (AM) is a “blind” analysis unit but retains all the advanced MLT design features. The AM variant is designed for integration as part of a Multiple NGA 2000 analysis system or special customer developed networks. The MLT AM novel “blind” packaging and network functionality allows the user to easily exploit the MLT analyser´s advanced expansion capability.

The MLT Analyzers can be designed as single stand-alone analyzers - complete with control module functionality and front panel display/operator interface - or as an central interface for multiple Analyzer Modules with a network board.

In MLT analyzer systems this feature eliminates duplication of the display/operator interface. In addition to the obvious operational benefits, MLT Analyzers offer significant cost and system packaging advantages not possible with conventional analyser configurations.
This flexible network communication architecture is shown in Fig. P-4.

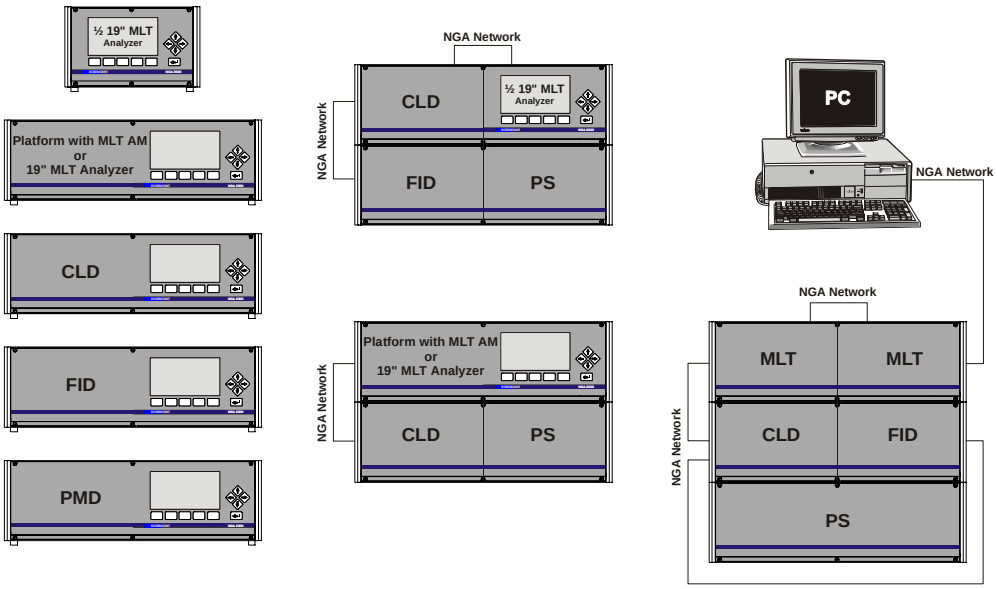

Fig. P-2: From separate analyzers to analyzer system

The modular erection with a bi-direction network makes possible

❏ Single devices (stand-alone analyzers)

- analyzer modules in a platform (separate manual) including optional inputs and outputs (e.g. SIO/DIO).
- MLT analyzer including optional inputs and outputs (e.g. SIO/DIO).

❏ The interconnection on simple way of analyzer modules including optional local inputs and outputs (e.g. SIO/DIO) to analyzer systems

- with platform (separate instruction) including system inputs and outputs (SIO/DIO)
- with MLT analyzer including system inputs and outputs (SIO/DIO)
- with customer own control units

For combination possibilities of NGA 2000 MLT I/O´s look at table P-1, please.

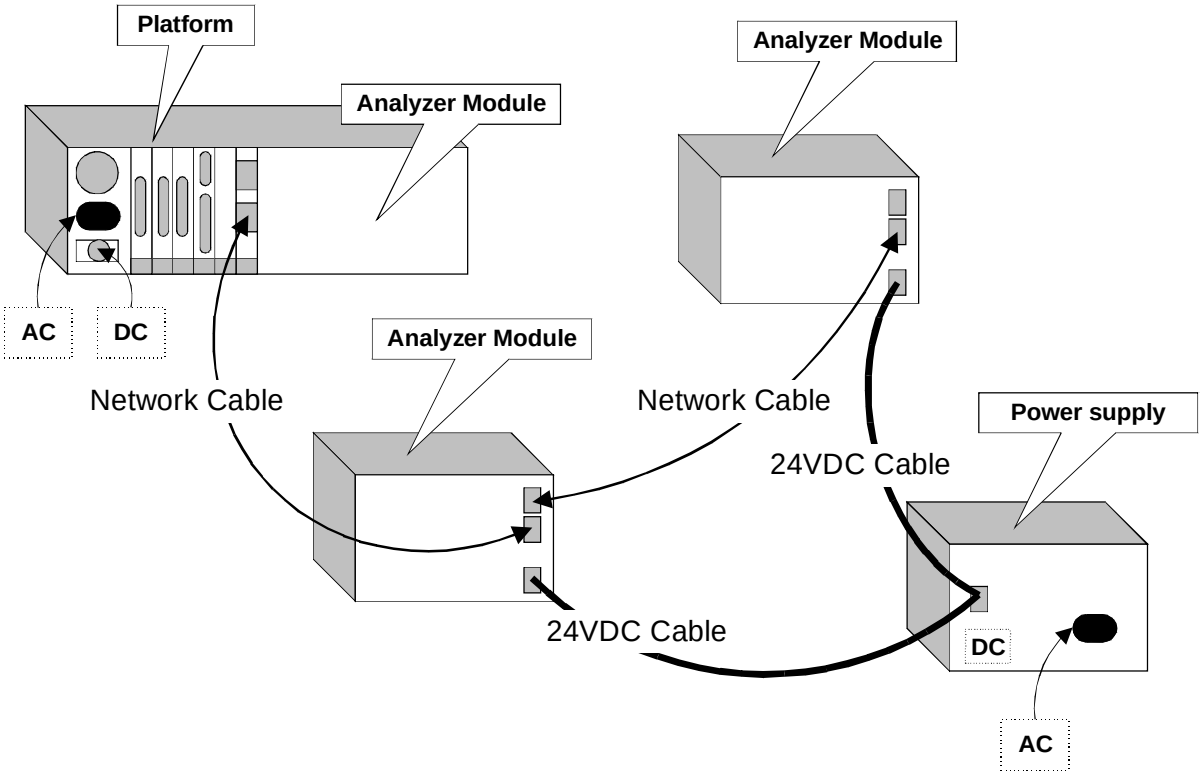

Fig. P-3: Example of NGA-cabling

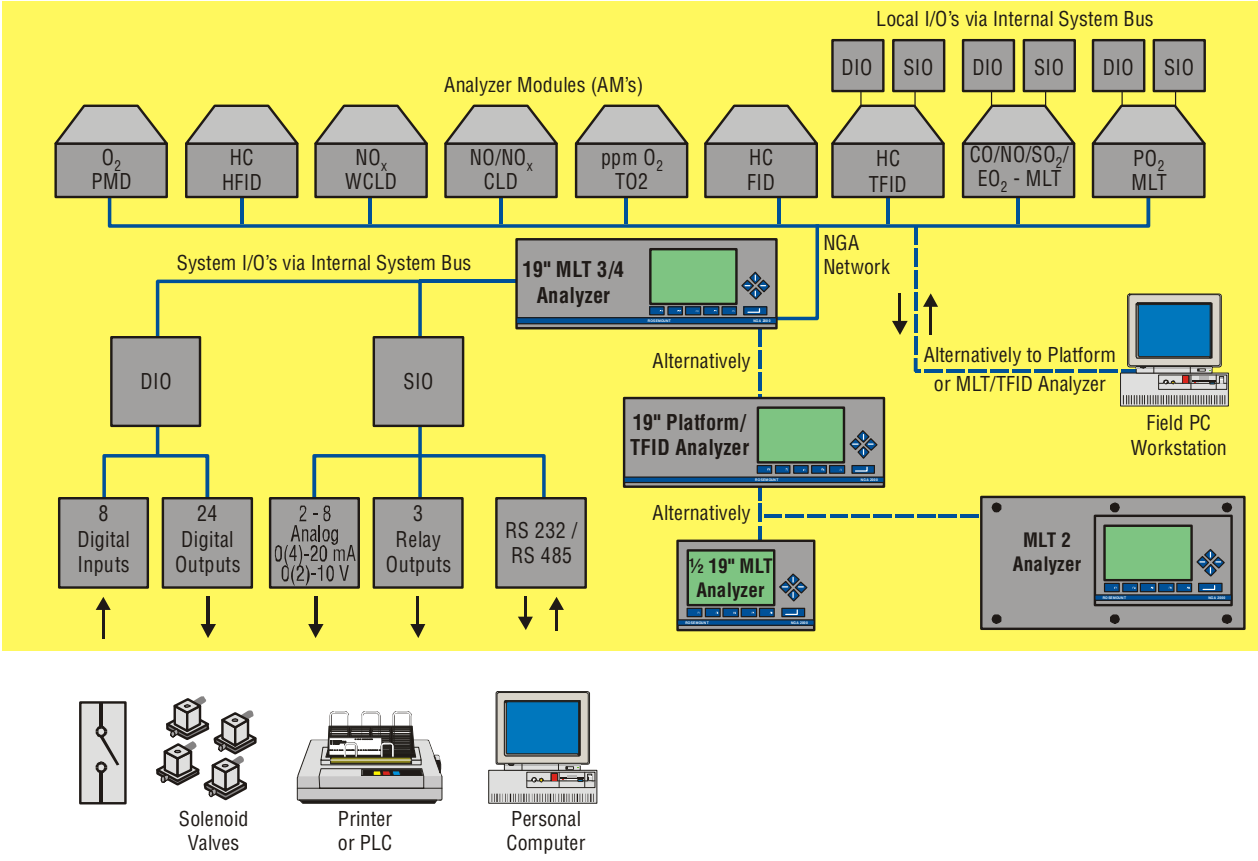

Fig. P-4: Example/possibilities of NGA analyzer system

Based on a typical MLT analyzer the schematic illustrates the simplicity of a networked system which incorporates additional AMs, such as Chemiluminescence and Flame Ionisation.
Other system functionalty includes links to associated sample handling, auxiliary I/O and PC Databases.
Fig. P-4 illustrates the historical background including all AM's and I/O's.
Actually we offer the platform, MLT, CLD, WCLD, FID, HFID (TFID) and SIO & DIO.
MLT includes the capability for NDIR/UV/VIS (fotometric), PO_2 (PMD, paramagnetic Oxygen), EO_2 (electrochemical oxygen), TEO_2 (trace oxygen) and TCD (thermal conductivity) benches.

System Unit	SIO/DIO Configuration
MLT analyzer module (AM): • without front panel, i.e. "blind" without control unit • can be combined with a platform, a MLT analyzer, a TFID analyzer or a customer developed control unit	⇒ 1 local SIO and 1 local DIO (or 2 local DIO's) can be installed in the MLT analyzer module ⇒ SIO and DIO can be configured for the MLT AM channels module only
Platform (Control Module Software): • Control unit with front panel • Without measurement channels	⇒ 1 SIO and up to 4 DIO's (or 5 DIO's) can be installed in the platform (CM I/O's) ⇒ SIO and DIO can be configured for all MLT channels & AM's combined with the platform
MLT analyzer (CM plus MLT AM software = MCA software): • Analyzer with front panel • CM and AM software in the same analyzer, i.e. all functions of the control unit and of the AM are combined in one controller board	⇒ 1 SIO and 1 DIO (or 2 DIO's) can be installed in the MLT analyzer (CM I/O) ⇒ SIO and DIO can be configured for all MLT channels & AM's combined with the MLT analyzer

Table P-1: Possibilities of NGA 2000 MLT I/O combinations

1. Technical Description

1.1 Standard General Purpose Applications

The different analyzers and analyzer modules are assembled in principle identically.
All components of analyzers or analyzer modules are incorporated into a housing for platform mounting (MLT 1), a 1/2 19" housing (MLT 1) or a 1/1 19" housing (MLT 3/4).
MLT 1 analyzer module housings for platform mounting are available to built-in into a NGA platform only (M) or for external installation and platform mounting (A) connected via NGA network.
The 1/2 19" and 1/1 19" housings are available as rack mounting (R) or as table-top (T) versions.
For analyzer modules there is mounted a blind plate instead of an operation front panel.

An IP 65 protected field housing (MLT 2) for outdoor installation is available, too.This enclosure is intended to be wall mounted.

1.2 Installation in Hazardous Areas

Note!
This manual does not deal with special conditions for analyzers in hazardous areas, related to installation, operation, maintenance etc. ***For such applications refer to the separate instruction manuals, delivered together with the analyzers.***

For installation in hazardous areas the MLT 2 analyzer or analyzer module is provided with an adapted pressurization system (ATEX type approved for Zone 1 resp. Zone 2 in Europe) and an impact tested magnetically operated front panel. Optionally intrinsically safe signal couplers are available, too.
A simplified Z Purge system permits installation in North America Zone 2 environments. The MLT 2-NF is type approved for non-flammable sample gas acc. to CSA-C/US for both Canada and US.

The CAT 200 analyzer or analyzer module, designed to be installed in hazardous areas, too, comprised of a 1/2-19" analyzer analyzer installed into a flameproof enclosure.This model is CSA-C/US and ATEX approved for installation in North-American and European hazardous areas.

1.3 Operating Front Panel

1.3.1 Standard Version

The front panel of the analyzer is the operating front panel (see Fig. 1-1).
Measured values and the entire operating procedure are displayed on a LC display. The operation and programming of the instrument is performed by using the four cursor keys, the ENTER key and the five soft keys

For analyzer modules there is mounted a blind plate instead of an operation front panel.

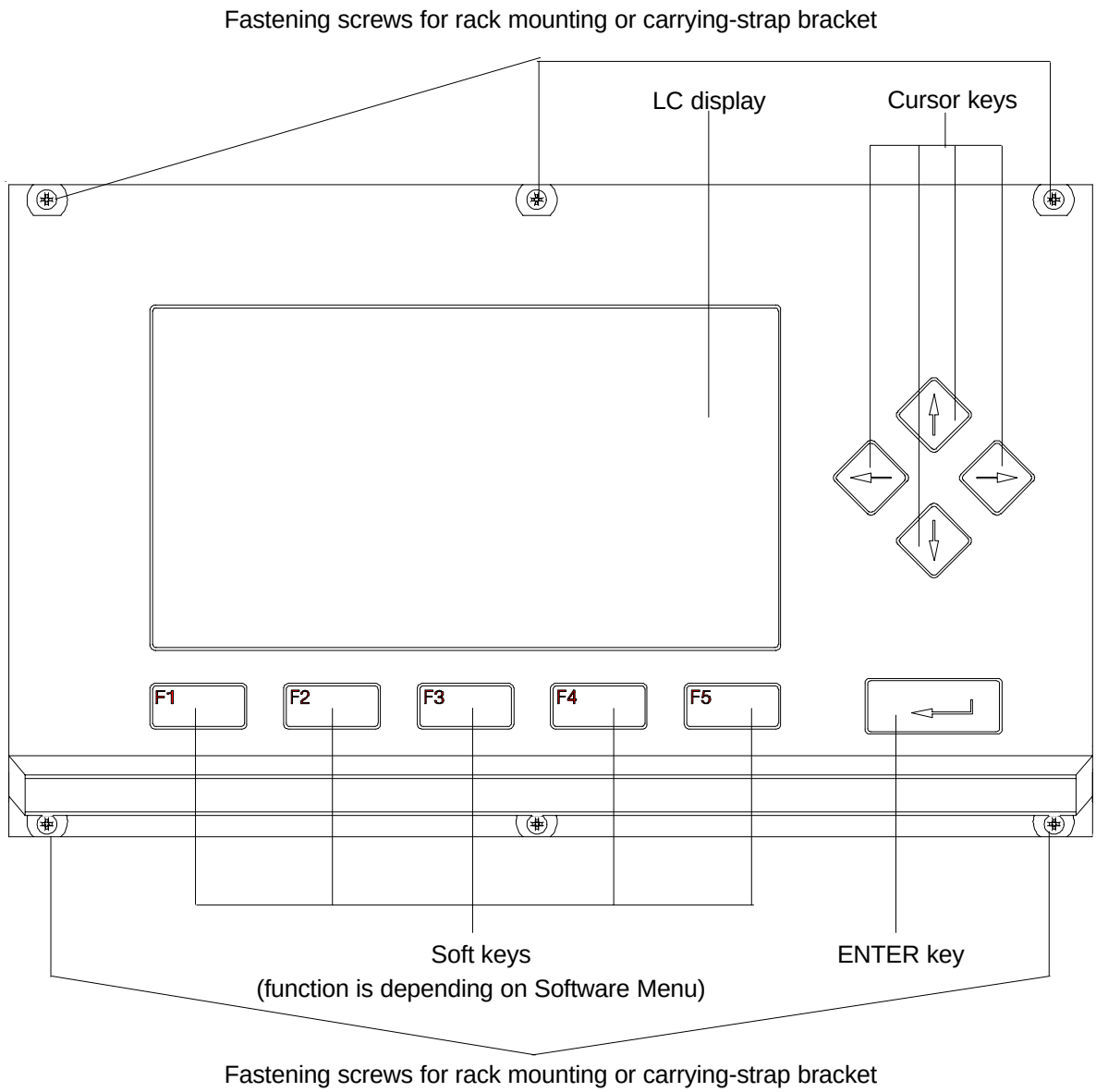

Fig. 1-1: Operation front panel, Front view

1.3.2 Magnetically Operated Touch Panel

Analyzers intended either to be used in hazardous area or for outdoor usage (e.g. MLT 2 or CAT 200) are provided with a magnetically operated touch panel. This special version ensures ingress protection (IP) and resistance against mechanical shocks. On account of its design it requires some special measures to operate the corresponding analyzer in a safe manner, so read the following instructions carefully!

1.3.2.1 Magnetic Touch Panel Elements

Whereas standard front panels are using keys for operating the analyzer the magnetically operated touch panel uses contactless technology instead. This results in a slightly different design:
Each standard panel key is replaced by a reed relay located behind the front panel design foil. (CAT 200, MLT 2 only: The sequence of the 4 keys at the right side has changed due to ergonomic reasons.)

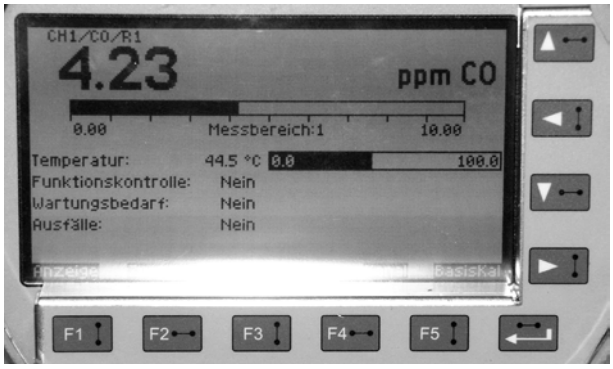

Fig. 1-2: Magnetically Operated Touch Panel, Front view

1.3.2.2 Accessories

To operate the magnetically operated touch panel a special tool (actuator) is required. The following picture shows this tool as it should be provided together with your analyzer. If it is missing please contact your local sales office.

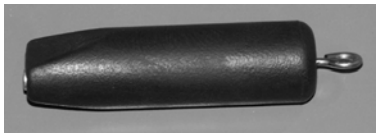

Fig. 1-3a: Magnetic actuator

Fig. 1-3b: Magnetic actuator, view at magnets

1.3.2.3 Operating the Touch Panel

The touch panel is operated by activating the reed relays using the actuator.
This is done by holding that actuator's end in front of the key that is equipped with 2 small magnets. As the reed relays are installed alternating vertical and horizontal to prevent accidentally activation of an adjacent key, the actuator has to be aligned the same way.
The design foil shows for each key how the actuator has to be aligned using the symbols „●—●“ and „●┃●“ :

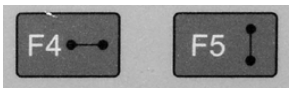

Fig. 1-4a: Symbols showing actuator alignment

Fig. 1-4b: Horizontally aligned, activating F4

Fig. 1-4c: Vertically aligned, activating F5

1.3.2.4 Storing the actuator tool

The tool is provided with a chain and a special fixture to be installed at one of the analyzer's mounting screws (see Fig. 1-5).

It is recommended to place the actuator tool on the fixture as shown to avoid unintended interference while not in use.

Fig. 1-5: Actuator stored when not in use

1.4 MLT 1

The different analyzers and analyzer modules are assembled in principle identically.
All components of analyzers or analyzer modules are incorporated into a housing for platform mounting (MLT 1) or a 1/2 19" housing (MLT 1).
The equipment is specified for an operating voltage of 24 V DC (± 5 %).
There are mounted optional different components at the rear side of the front panel (Fig. 1-7).

1.4.1 MLT 1 1/2 19" housing

The 1/2 19" and 1/1 19" housings are available as rack mounting (R) or as table-top (T) versions.
For analyzer modules there is mounted a blind plate instead of an operation front panel.
On the rear panel the connector for 24 V dc supply (MLT 1 [not MLT (M)]), the gas connections, the network connections and the connectors of optional PCBs (see optional, separate Operation Manuals) are accommodated.

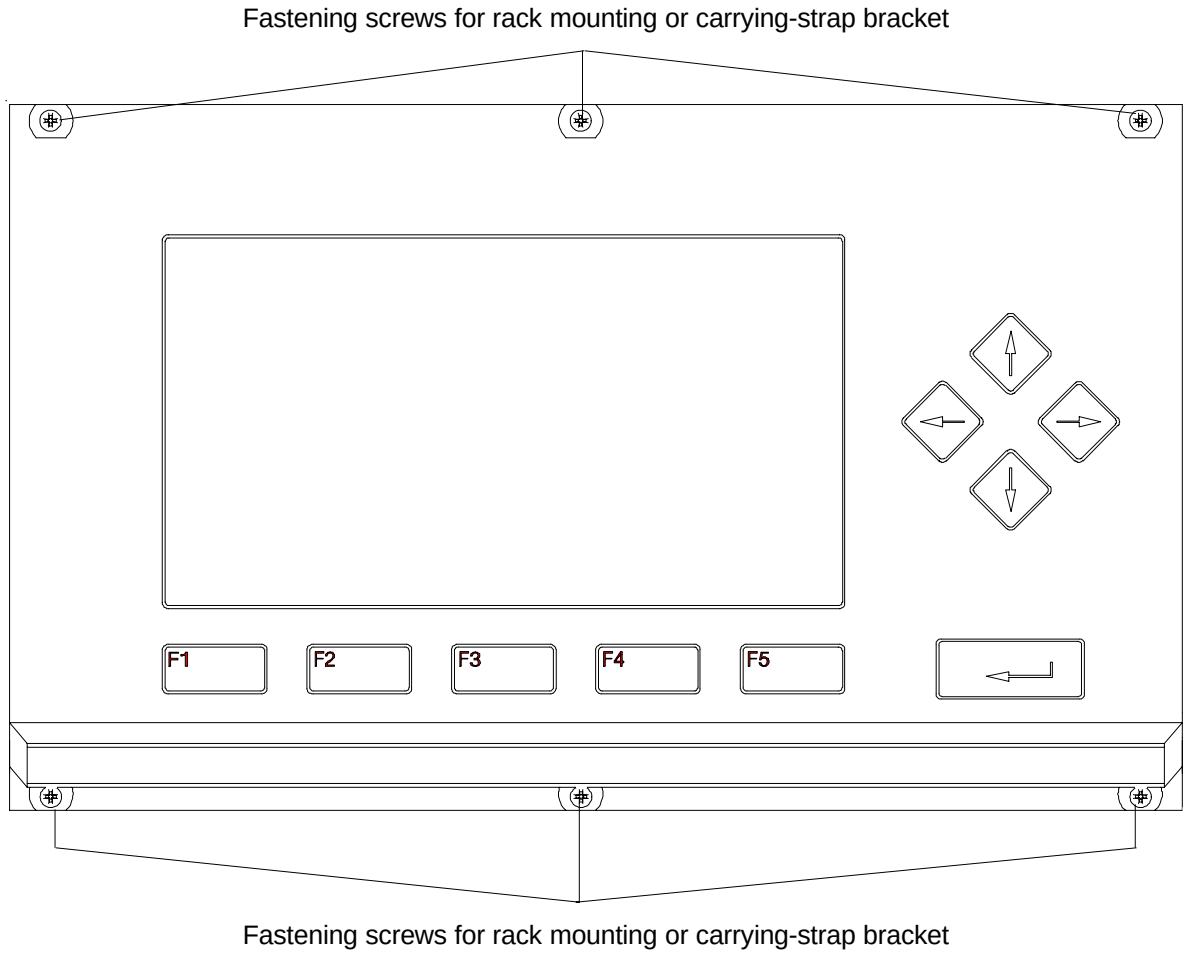

Fig. 1-6: MLT analyzer, Front view

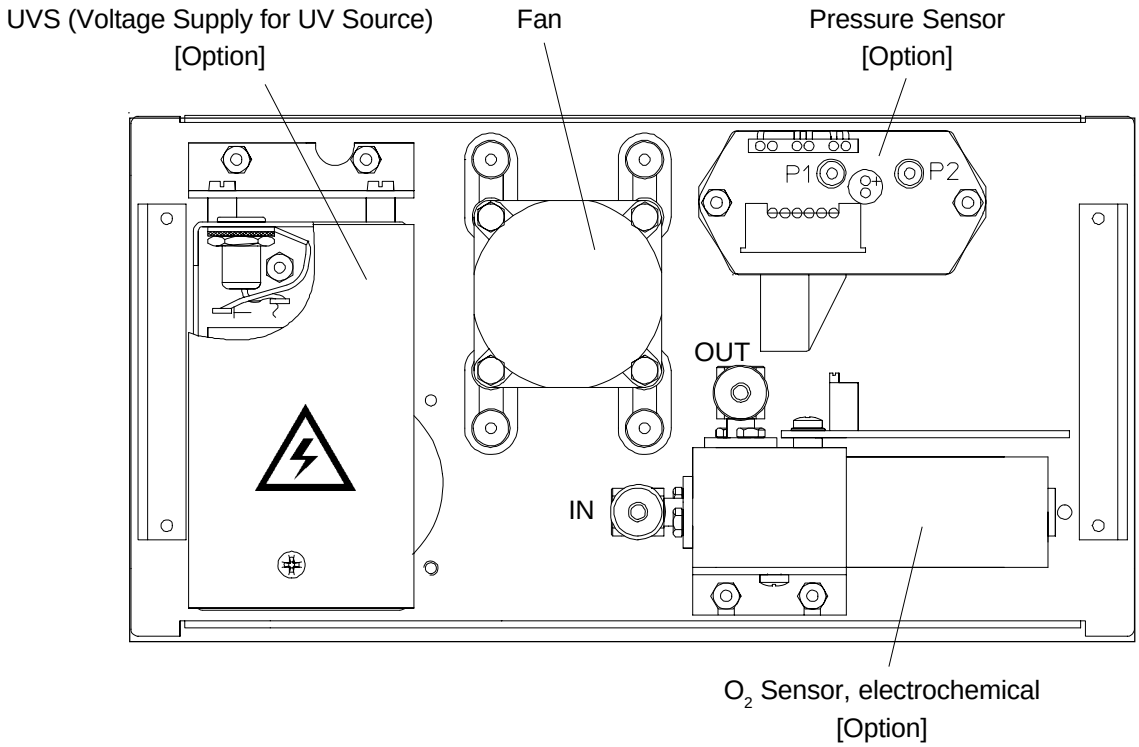

Fig. 1-7: MLT 1, Front panel, Rear view

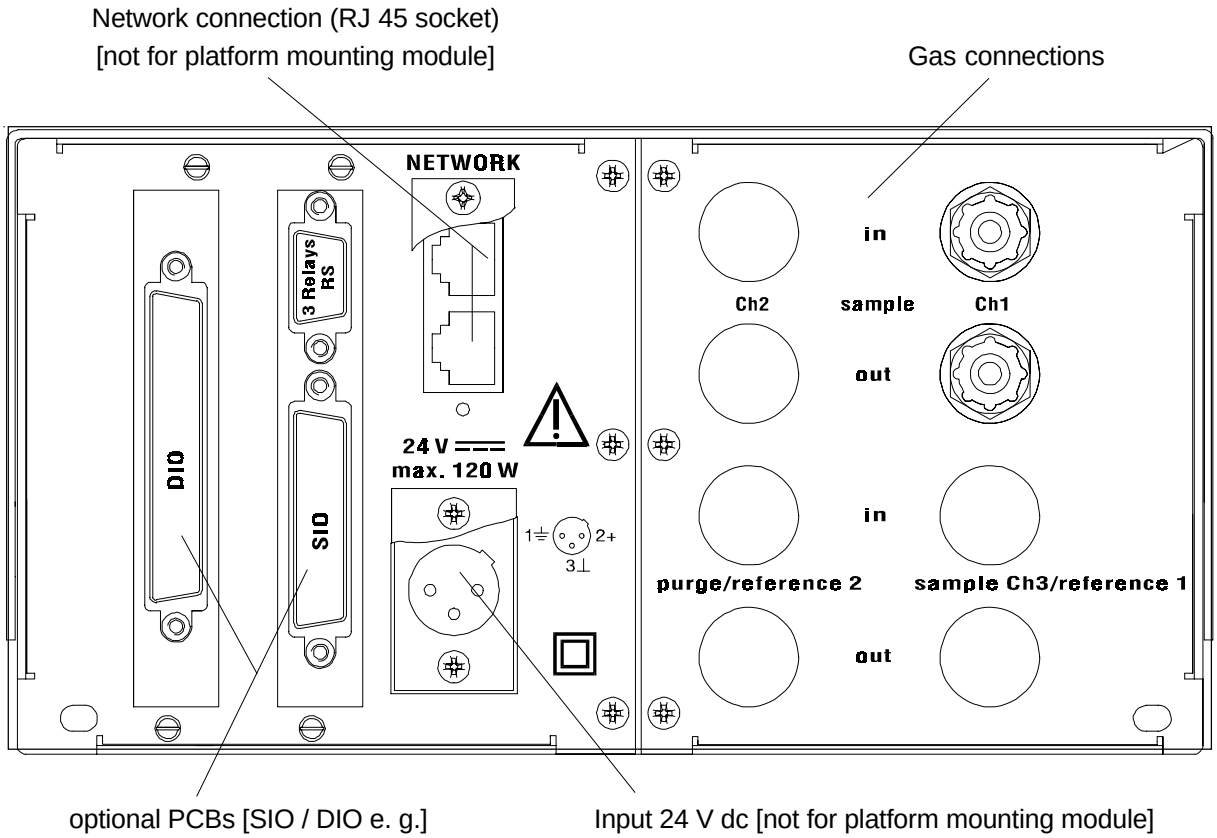

***Fig. 1-8: MLT 1, Rear panel** (standard)*

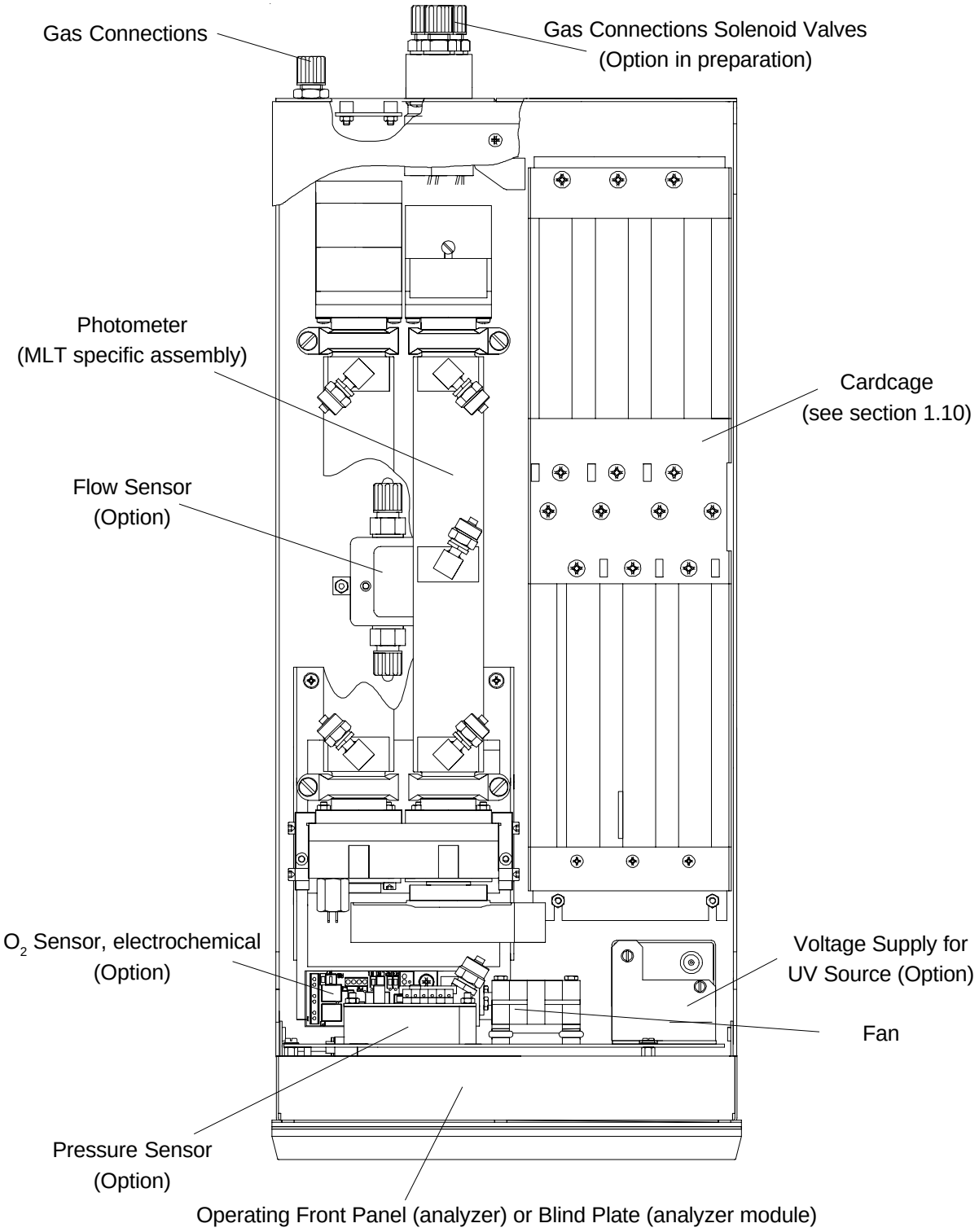

Fig. 1-9: MLT 1, Rack/Table-top Housing, Top view
(with electrochemical O_2 Sensor)

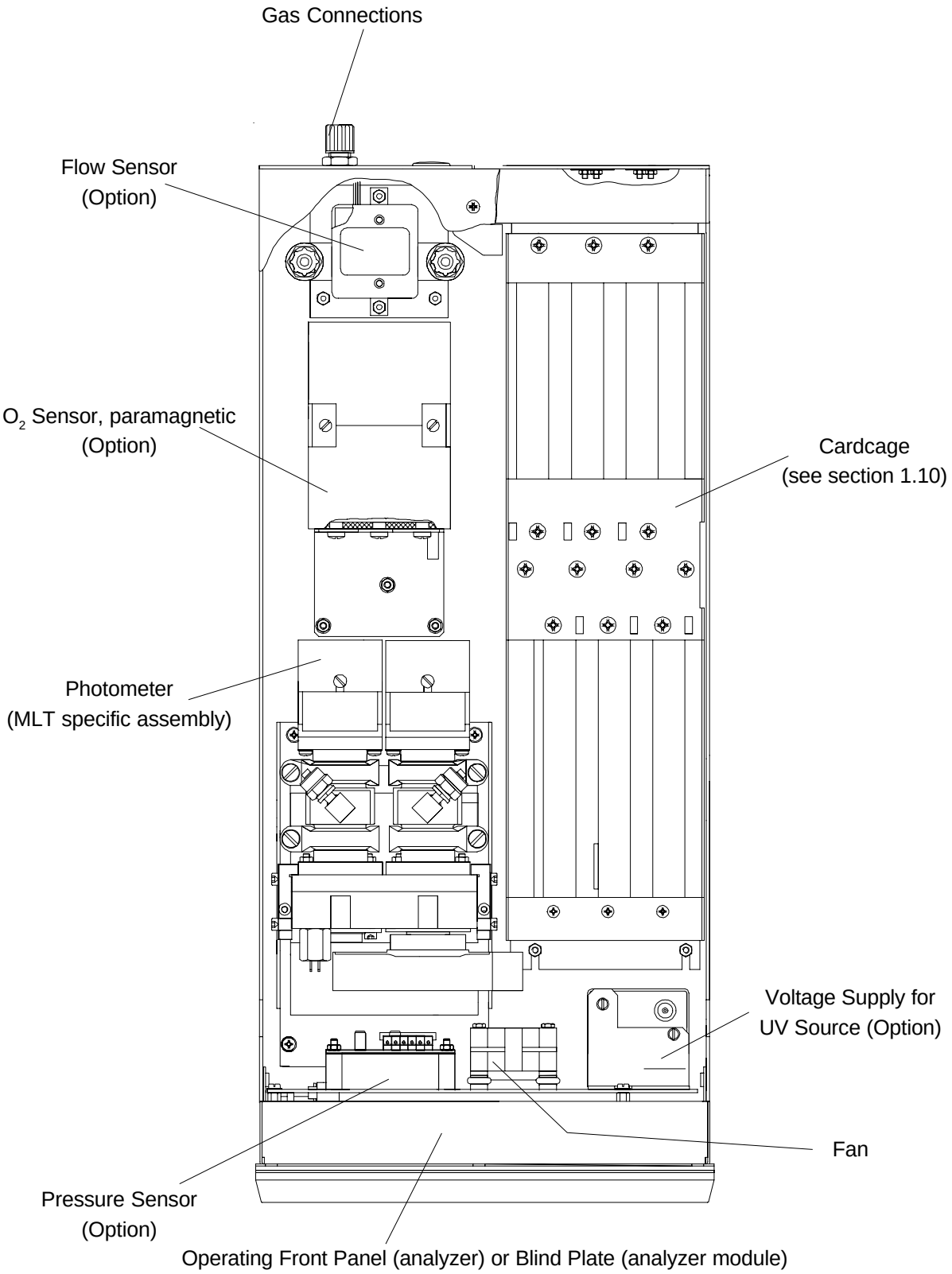

Fig. 1-10: MLT 1, Rack/Table-top Housing, Top view
(with paramagnetic O_2 Sensor)

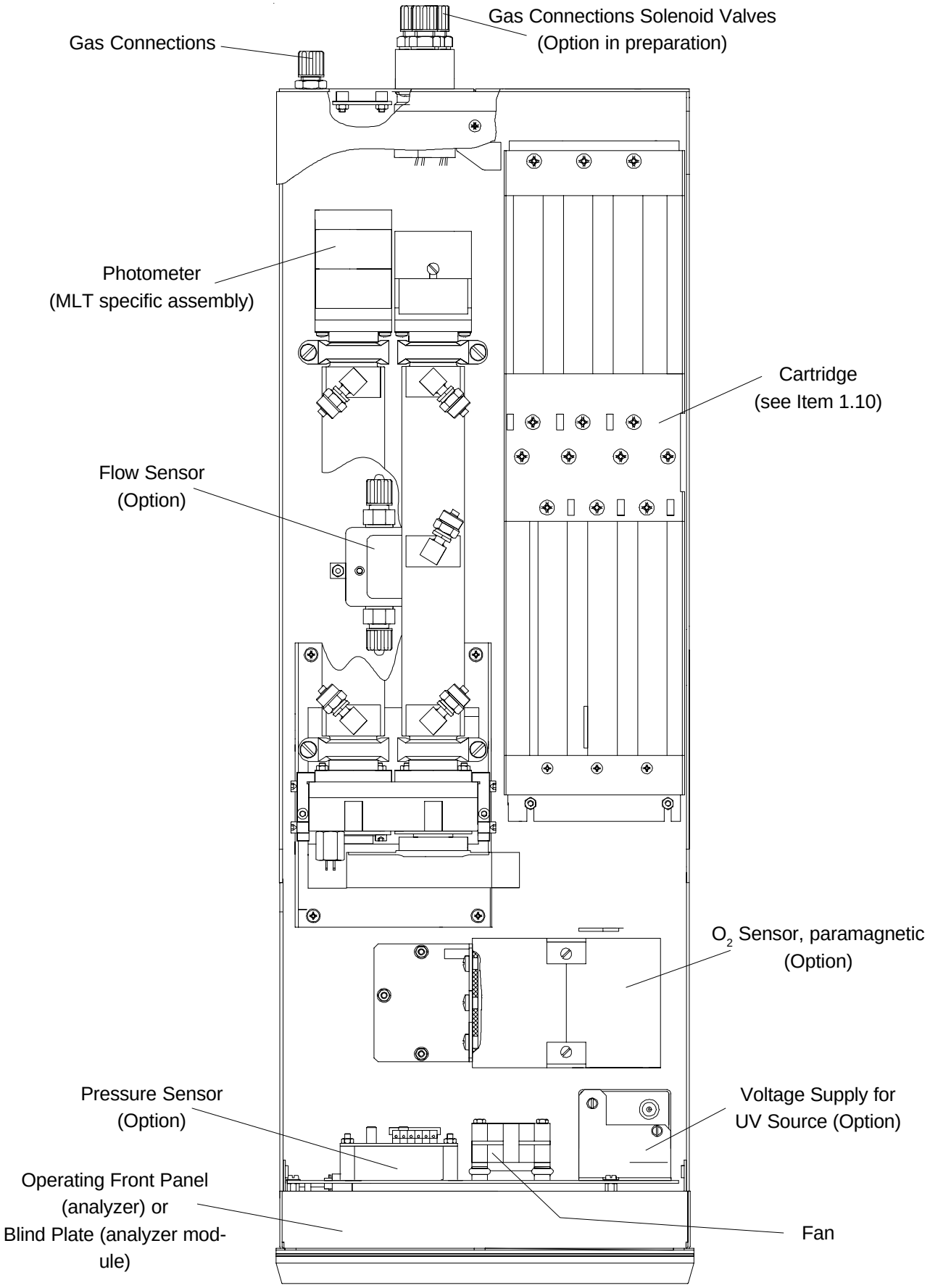

Fig. 1-11: MLT 1, Rack/Table-top Housing extended, Top view
(with paramagnetic O_2 Sensor)

1.4.2 MLT 1 ULCO

NGA 2000 MLT 1 ULCO gas analyzer is specially designed to measure ultra low carbon monoxide in a matrix with high water vapor and/or carbon dioxide contents. The analyzer is equipped with a 2nd optical bench including a multi detector assembly (MDA block) for cross interference compensation, especially being designed for automotive and flue gas applications. Water vapor and carbon dioxide measurement is used for internal cross interference compensation thus providing an ultra low CO and percentage CO_2 channel as standard. This solution is designed for automotive (Internal Combustion Engine Emissions, ICEE) and Continuous Emissions Monitoring Systems (CEMS). An additional CO_{high} channel is available as option on automotive applications. The water vapor channel is designed for measuring crossinterferences only but coudl be used as a measuring channel too but without offering the same accuracy as a "normal" measuring channel. This means that teh standard specifications are not applicable for this special water vapor channel.

For gas purity measurement new quality standards require ultra low CO measurement but not such high dynamic ranging and cross compensation.
Therefore the 2nd bench (MDA) is not used, but another channel, e.g. ultra low carbon dioxide ($ULCO_2$) can be implemented in MLT 1.

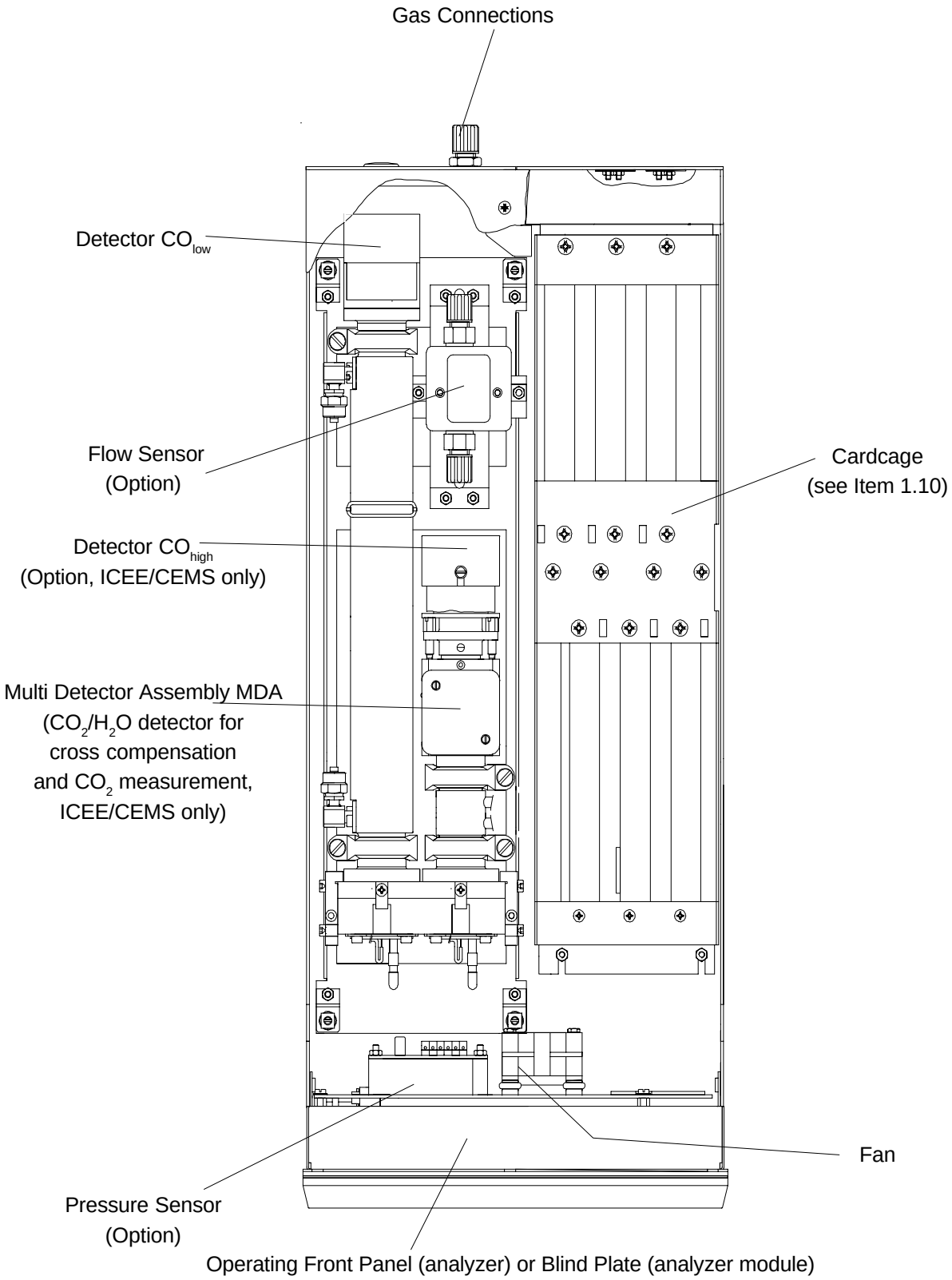

Fig. 1-12: MLT 1 ULCO, Rack/Table-top Housing, Top view

1.4.3 MLT 1 Housing for platform mounting

MLT 1 analyzer module housings for platform mounting are available to built-in into a NGA platform only (M) or for external installation and platform mounting (A) connected via NGA network. Analyzer modules for platform mounting have a blind plate too (Fig. 1-x).
Additional the necessary electrical connections for platform mounting (24 V dc and network) are brought out to this blind plate. For external installation of analyzer module (A) the connections on frontside are closed with a blind plate to be in agreement with the CE conformity. For platform mounting of the module remove this blind plate.

For analyzer module (A) [external installation or platform mounting] it is not allowed to supply the module from front and rear simultaneously !

For external installation connections on frontside absolutely have to closed with the blind plate delivered from our factory to be in agreement with the CE conformity.!

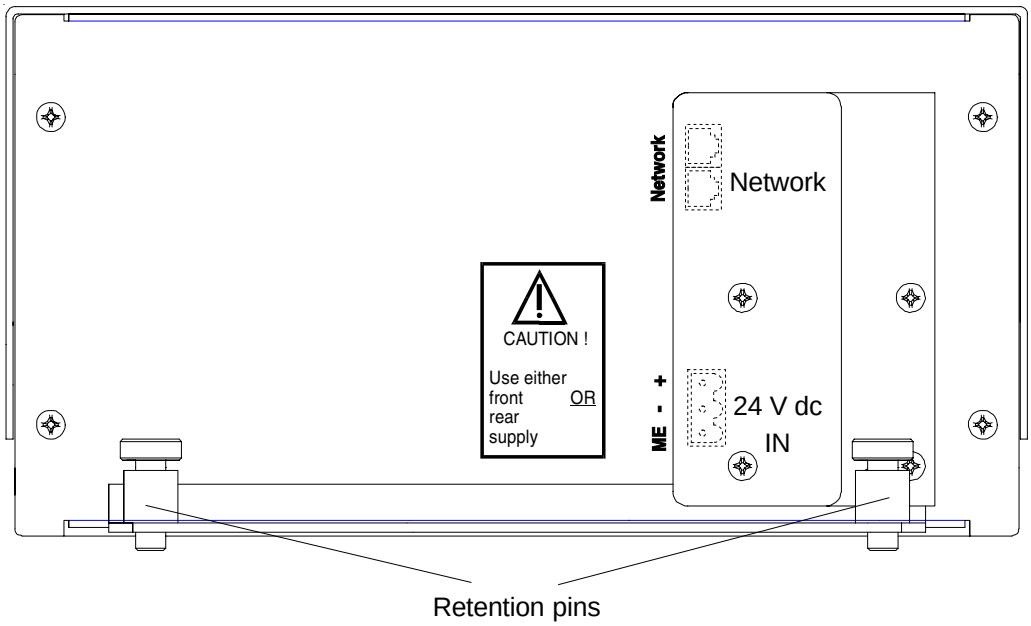

Fig. 1-13: MLT 1 analyzer module (Platform mounting), Front panel, Front view

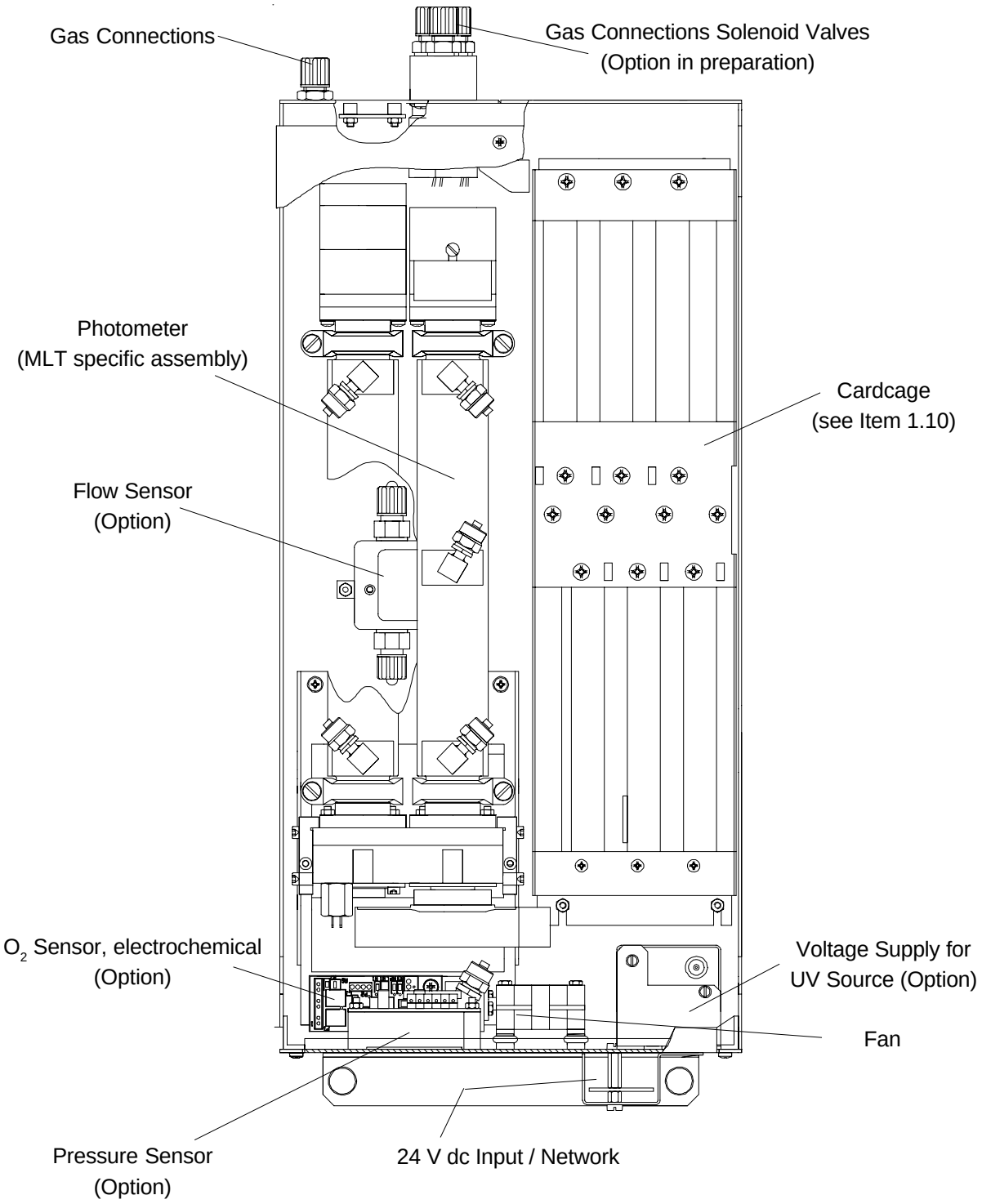

Fig. 1-14: MLT 1, Platform mounting, Top view
(with electrochemical O_2 Sensor)

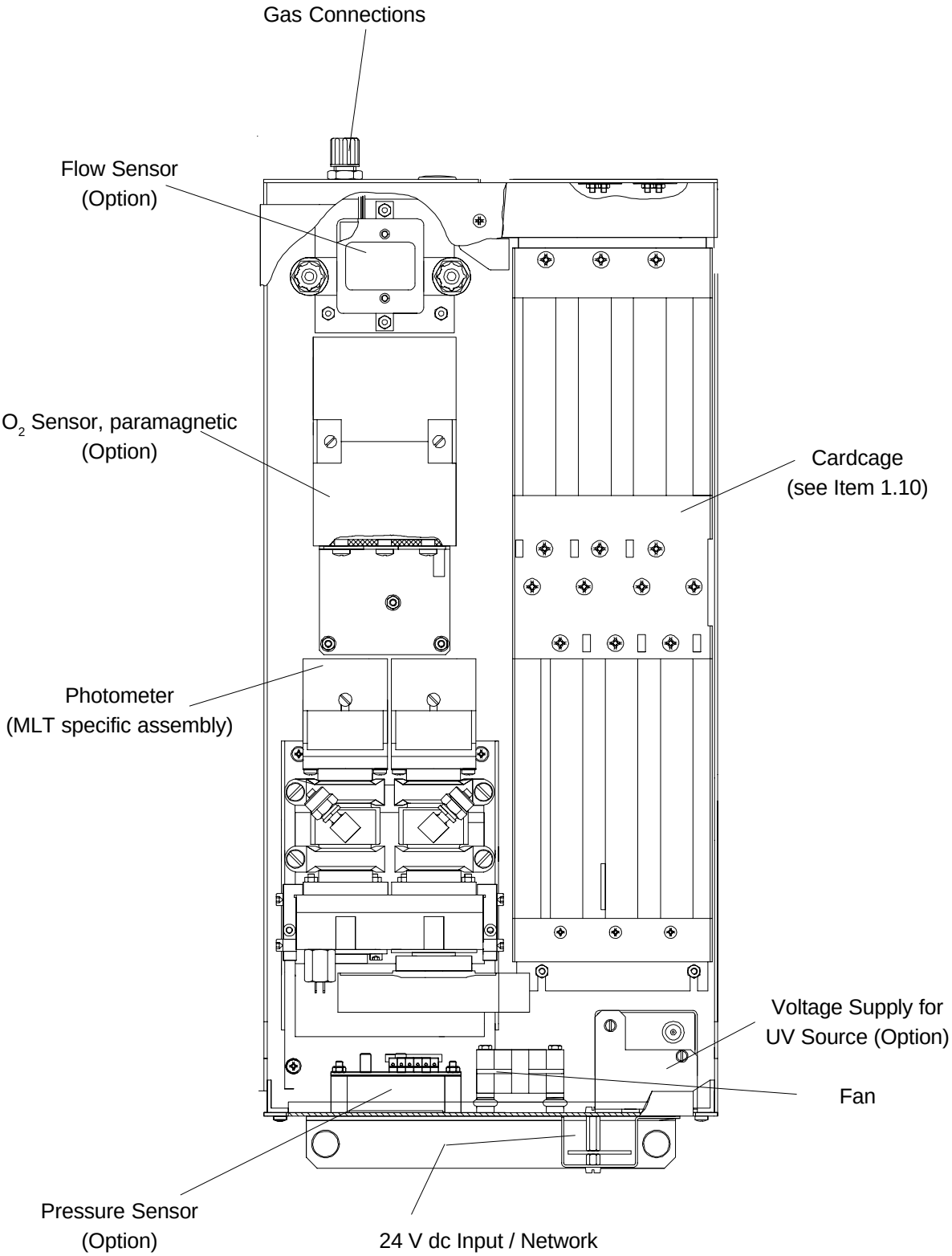

Fig. 1-15: MLT 1, Platform mounting, Top view
(with paramagnetical O_2 Sensor)

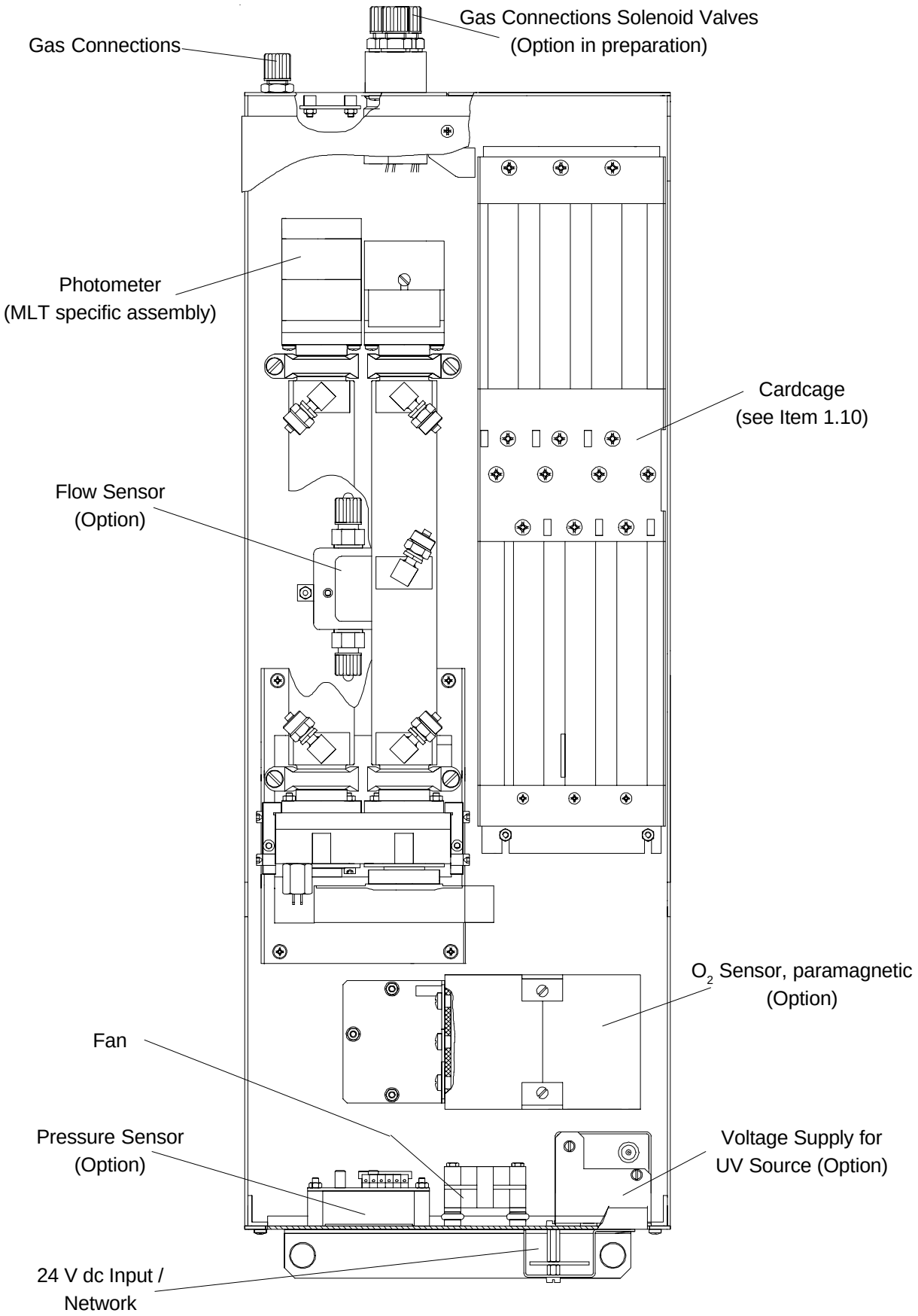

Fig. 1-16: MLT 1, Platform mounting extended, Top view
(with paramagnetic O_2 Sensor)

1.5 MLT 2 (Field Housing)

With MLT 2 Emerson Process Management offers a gas analyzer designed for wall mounting and outdoor installation due to it‘s stainless steel enclosure.
All MLT 2 components are incorporated into a wall-mountable housing with ingress protection code IP 65 (approx. NEMA 4/4X) according to EN 60529.
The optional impact protected front panel enables installation at harsh locations (or even in hazardous area when combined with a pressurization system for the enclosure).
Such analyzers are contactless operated using a special magnetic tool.
All interface signals (partial options) are accessible on internal screw terminal blocks. That applies to mains power supply, too..
The MLT 2 can be purged to remove corrosive or toxic gases with synthetic air or instrumental air (dry, free of oil, hydrocarbons and corrosive components; 20 to 35 °C purge gas temperature). If sample gas contains flammable gas components above the lower explosion limit, the required explosion protection measures (purge system) must be approved by an authorized person (purge system) .
MLT 2 is available with a dual compartment enclosure, too, whereat electronics and photometer/ sensors are installed in two separate housings.
A special high temperature variation of MLT 2 for temperatures up to 120 °C is optionally available (standard: 55 °C; 65 °C as option).

The analyzer is specified for an operating voltage of 230 V AC or 120 V AC resp., 47-63 Hz.
Built-in power supply (manual switch between 230/120 VAC) is either power supply of type SL5 or of type SL10

For installation in hazardous areas the MLT 2 is provided with an adapted pressurization system (ATEX type approved for Zone 1 resp. Zone 2 in Europe) and an impact tested magnetically operated front panel. Optionally intrinsically safe signal couplers are available, too.
A simplified z-purge system permits installation in North America Zone 2 environments.

This current instruction manual covers using the MLT 2 analyzer for general purpose applications only!

Installation, startup and maintenance for operation in hazardous areas are described in detail in a separate instruction manual, shipped together with each such analyzer and are not subject of the current instruction manual!

WARNING

Connection of mains and interface signals are to be established via internal screw terminal blocks. This requires working inside an opened analyzer, near by potentially live components!

Installation of this analyzer is allowed by qualified personnel only, familiar with the potential risks of working near live components!

The model MLT 2 (field housing) does not provide a mains switch. A mains switch or circuit breaker must be provided in the building installation. This switch has to be installed near by the analyzer, must be easily operator accessible and has to be designated as disconnector for the analyzer.

Cables for external data processing must be double insulated for mains voltage. If not available, signal cables inside the analyzer must be installed with a distance of at least 5 mm to mains cables. Distance has to be ensured permanently, e.g. by using cable ties!

CAUTION

MLT 2 -- HEAVY INSTRUMENTS !

The analyzer variation MLT 2 intended to be wall mounted and/or outdoor installed weigh up to 35 kg, depending on included options!

Use two person and/or suitable tools for transportation and lifting these instruments!

Take care to use anchors and bolts specified to be used for the weight of the units!

Take care the wall or stand the unit is intended to be installed at is solid and stable to hold the units!

WARNING

Risk of electric shock!

MLT 2 analyzers provide earth connection terminals. To minimize risk of electric shock the enclosure must be connected to earth! Therefore connecting the analyzer is allowed only by using a 3 pole mains cable providing a separate earthing conductor.

Any interruption of the earthing conductor inside or outside the analyzer as well as loosening the earthing connection may cause serious injury! Intended interruption of earthing connections is not permissible!

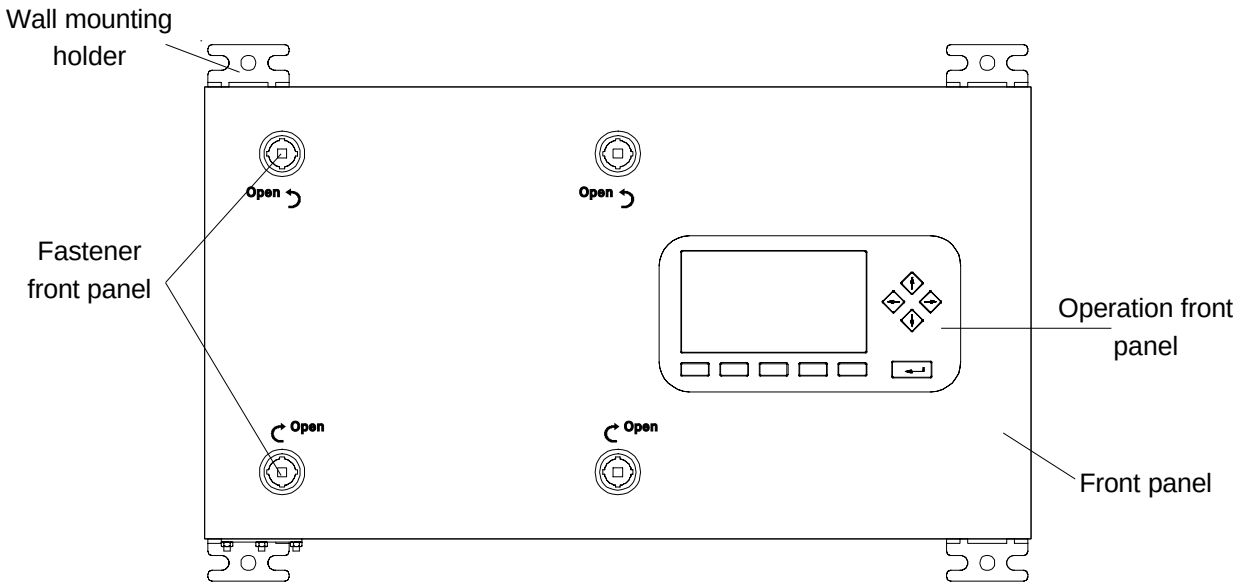

Fig. 1-17a: Front view MLT 2 *(Standard housing/Standard operation front panel)*

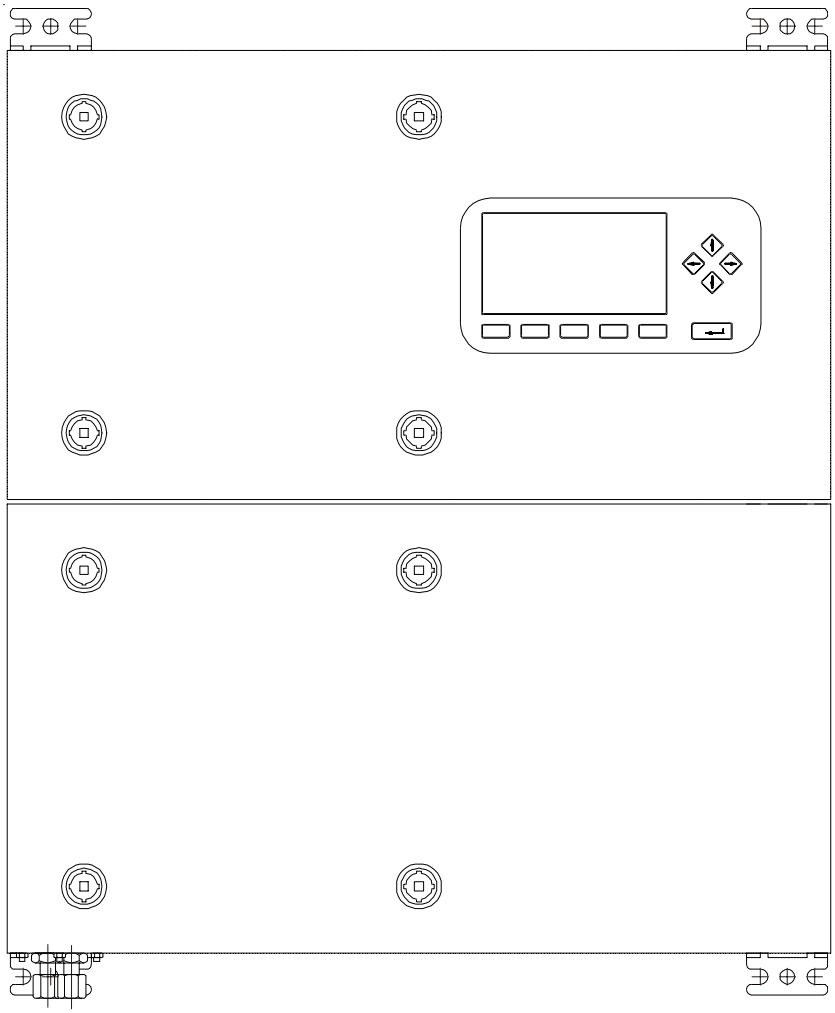

Fig. 1-17b: Front view MLT 2 *(Dual compartment housing/Standard operation front panel)*

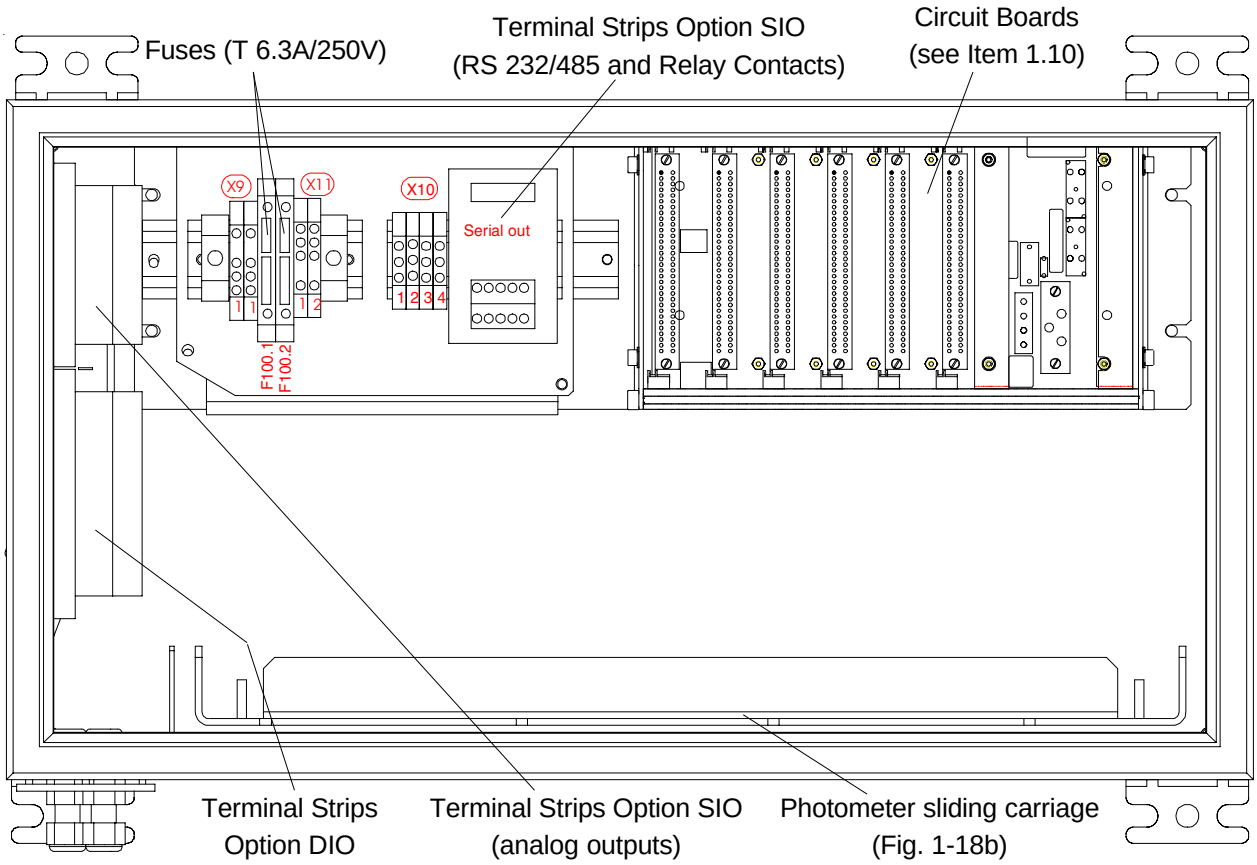

Fig. 1-18a: MLT 2, Inside view *(drawing without front panel)*

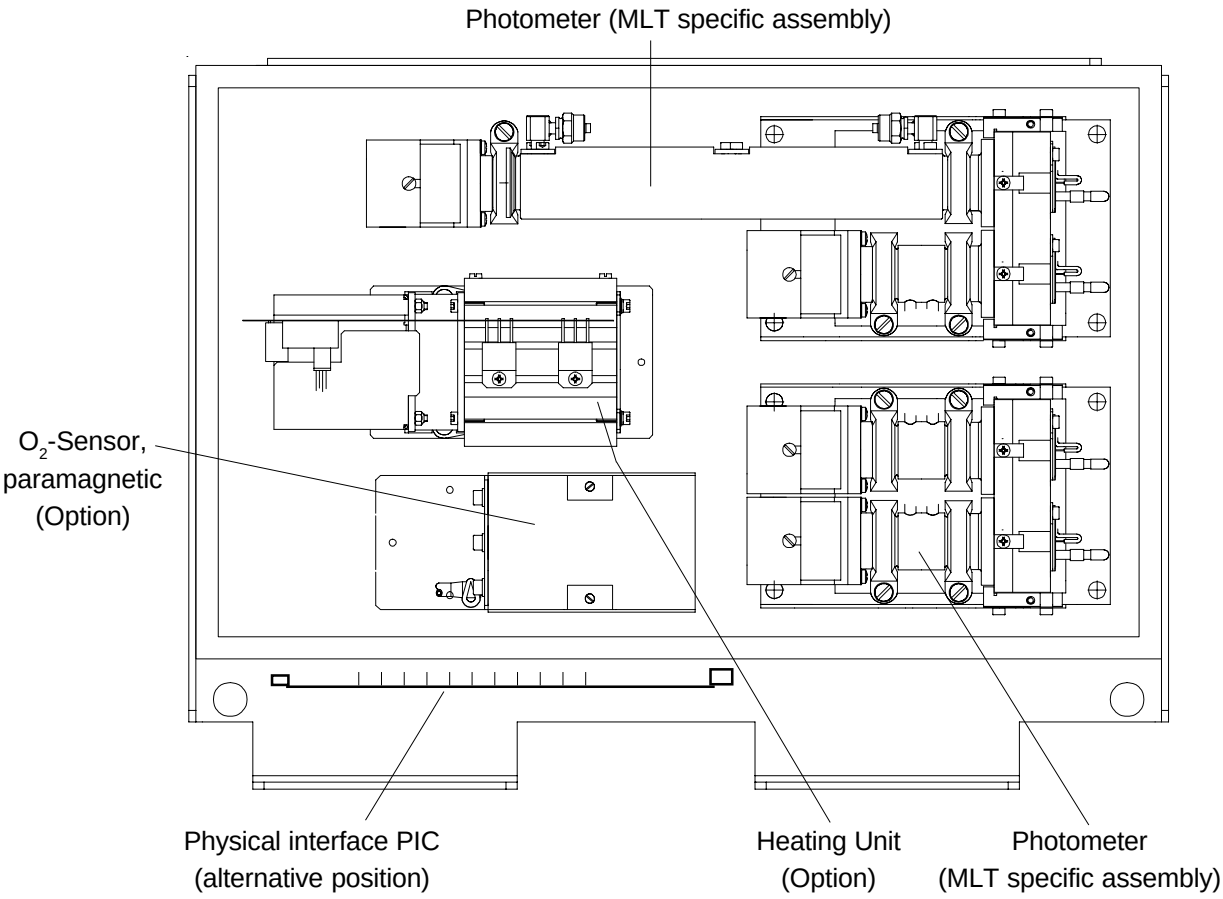

Fig. 1-18b: MLT 2, Photometer sliding carriage, Top view

1.6 MLT 3

All components of analyzers or analyzer modules are incorporated into a 1/1 19" housing. The housings are available as rack mounting (R) or as table-top (T) versions. For analyzer modules there is mounted a blind plate instead of an operation front panel.
The equipment has an internal power supply with “autoranging” for operating voltages of 230 V AC or 120 V AC resp., 47-63 Hz.

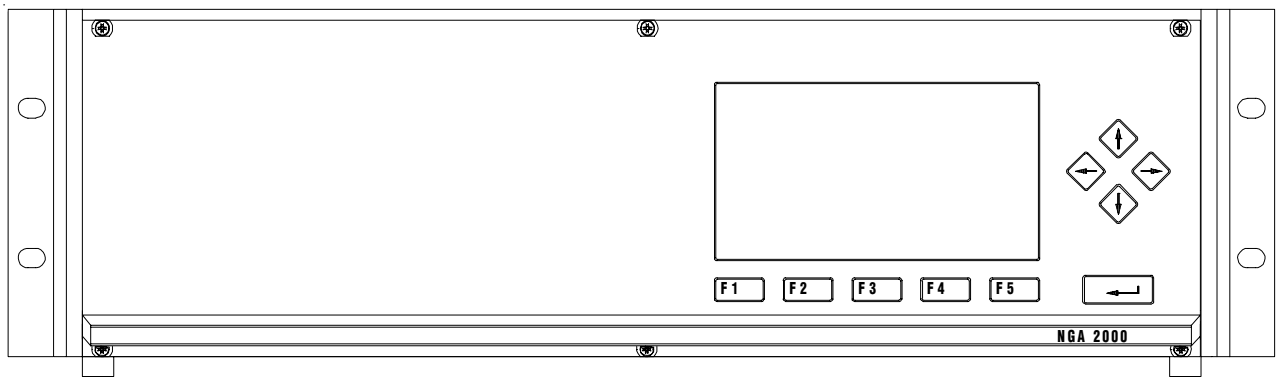

Fig. 1-19: MLT 3 (standard) (1/1 19" housing), front view

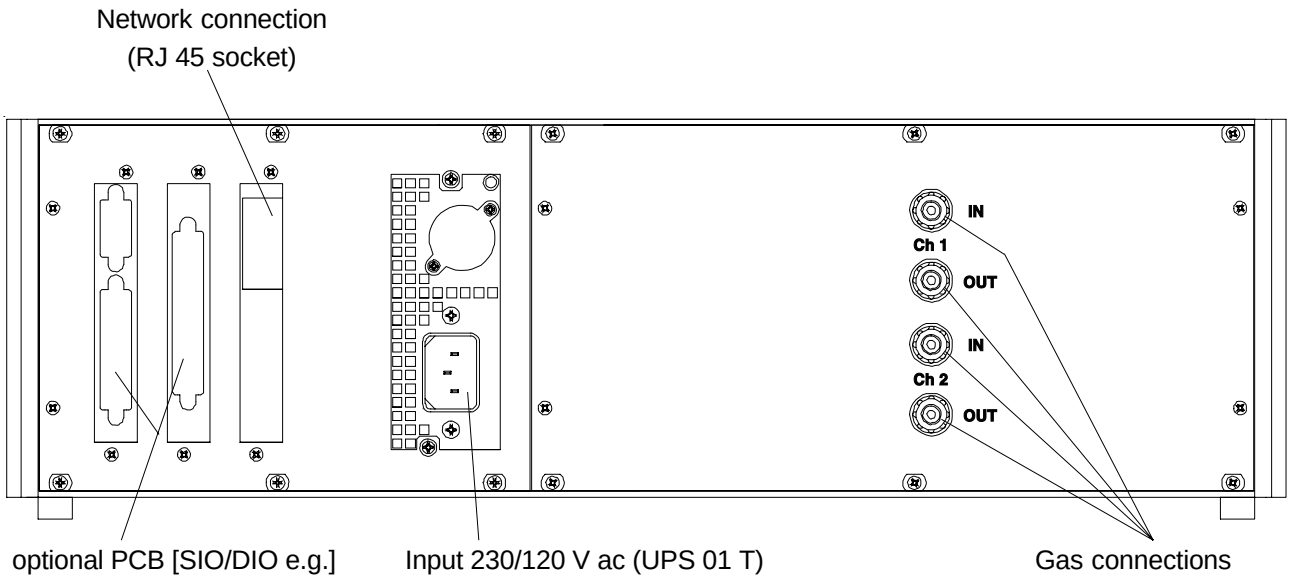

Fig. 1-20: MLT 3 (standard version), Rear view

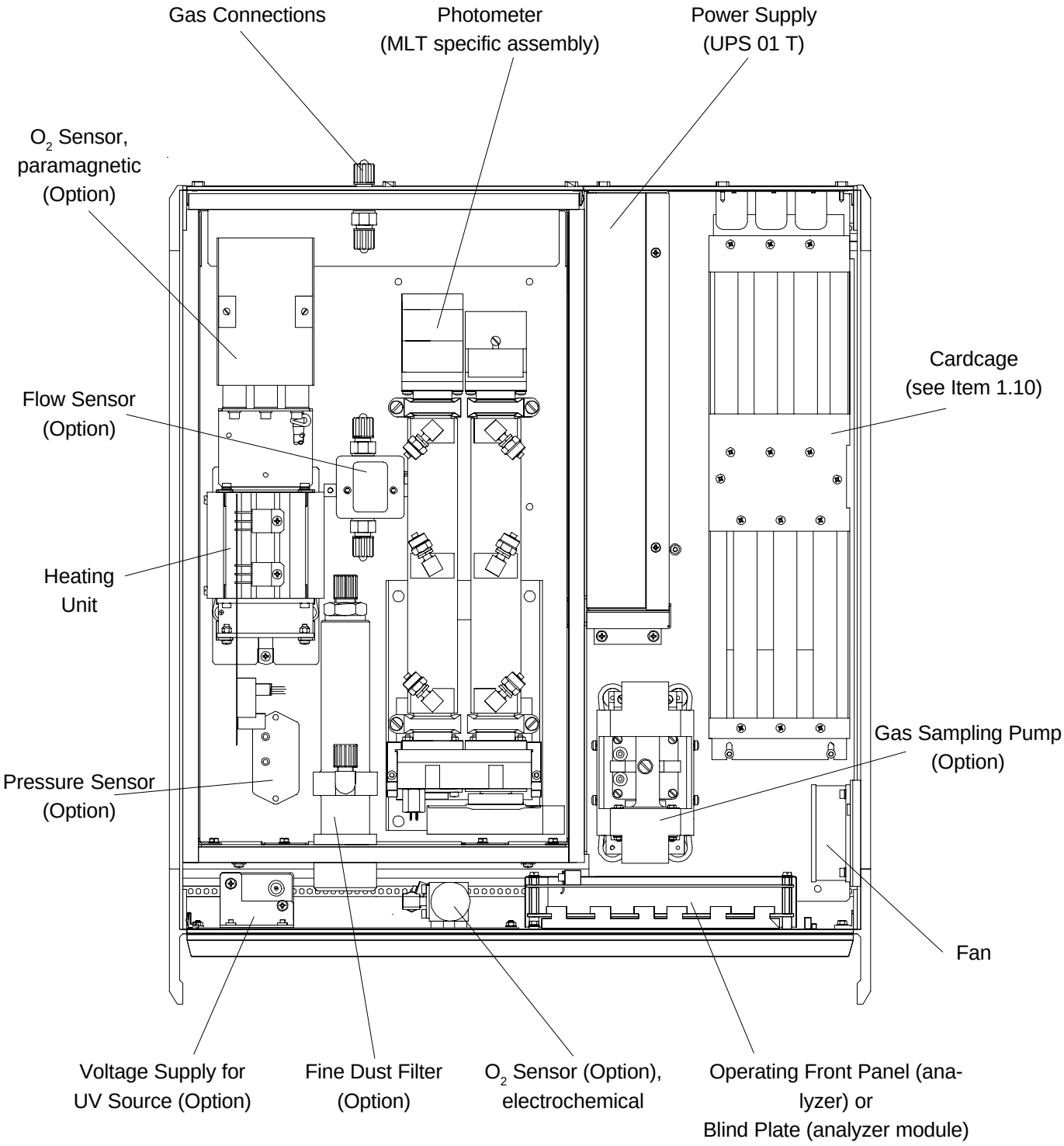

Fig. 1-21: MLT 3 (standard version), Top view

1.6.1 MLT 3 (Gas purity measurement)

Special versions of MLT 3 are available with suppressed ranges for gas purity measurements and measurements requiring physics thermostated up to 120 °C - see separate manual for gas purity with suppressed ranges.

Example and short description of the main deviations from standard MLT 3:
Compared with “standard MLT 3 version” the “MLT 3 for gas purity measurement” can be equipped with a divided front panel.
On the right side there is the operation front panel (analyzer) or a blind plate (analyzer module) resp.
On the left side there is built-in one flow meter and as option one quick shutoff connector as sample gas inlet.
Is the instrument is not equipped with a solenoid valve block, there can be built-in as option a manual 4/2-way-valve to switch to sample gas, zero gas or span gas.
For more detailed informations use the special instruction manual for this application.

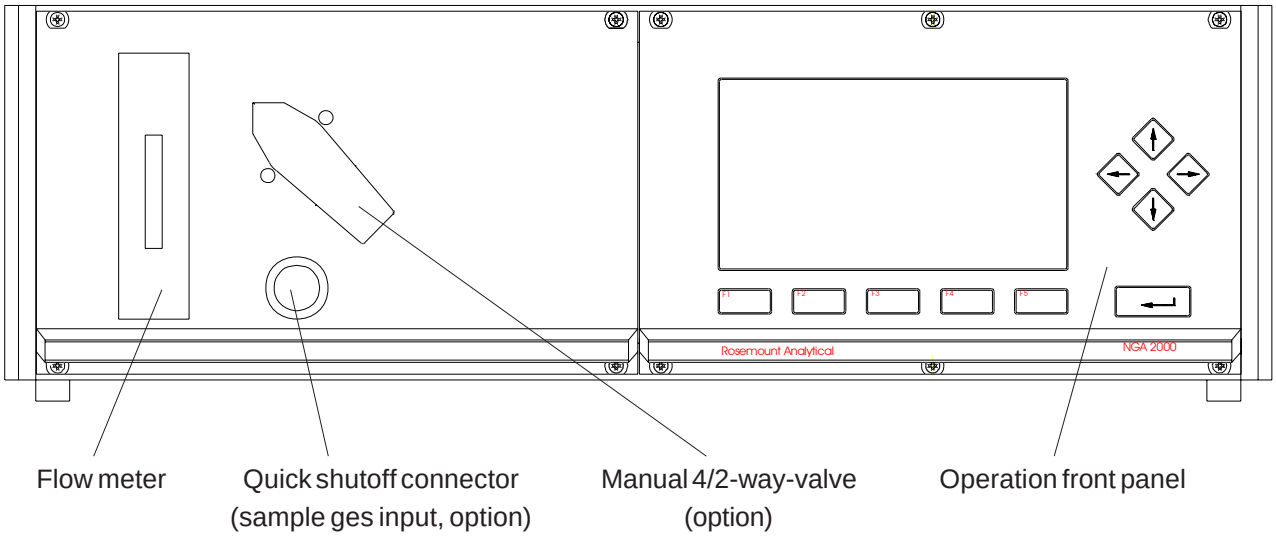

Fig. 1-22a: MLT 3 (example for gas purity measurement), front view

Additional to “standard MLT 3 version” (identical on the left part) the “MLT 3 for gas purity measurement” is equipped with a solenoid valve block for the supply of sample gas, zero gas and span gas, controlled by the analyzer. The control will be done with the relay outputs of I/O Board “SIO” via an external connection cable “SIO → Solenoid Valve Block” (pin assignments look at Fig. 21-4).

The necessary gas connections are placed here too and are used and marked analyzer specific (see Fig. 1-23). The outlet of the valve block is connected to the MLT 3 gas inlet.

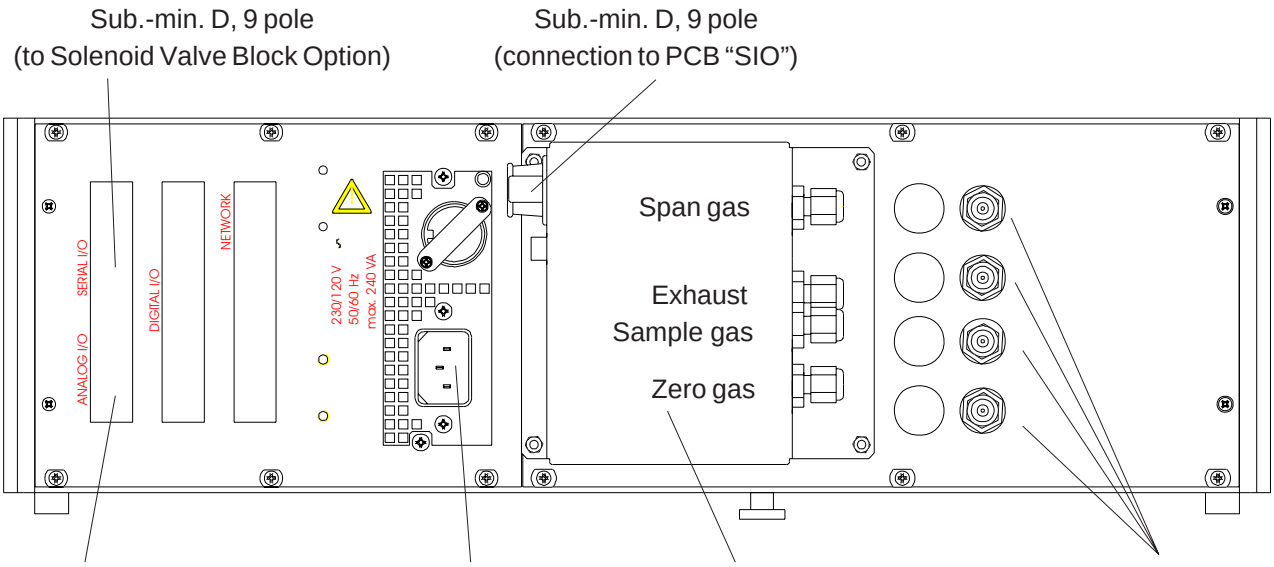

Fig. 1-22b: MLT 3 (example for gas purity measurement), Rear view

1.6.2 MLT 3HT (high temperature measurement)

As a special versions MLT 3HT is available for measurements requiring physics thermostated up to 120 °C. The physical section is parted in a HT part (special heating and isolation) for all components being in contact with sample gas - SS tubing, fine dust/safety filter, needle valve, calibration valve (depending on options). The isolation (filter) cell, chopper & detector are outside of the heated room together with a temperature controller and ventilator. The heated line and external pump (with heated head) need isolation at any connection/ fitting:

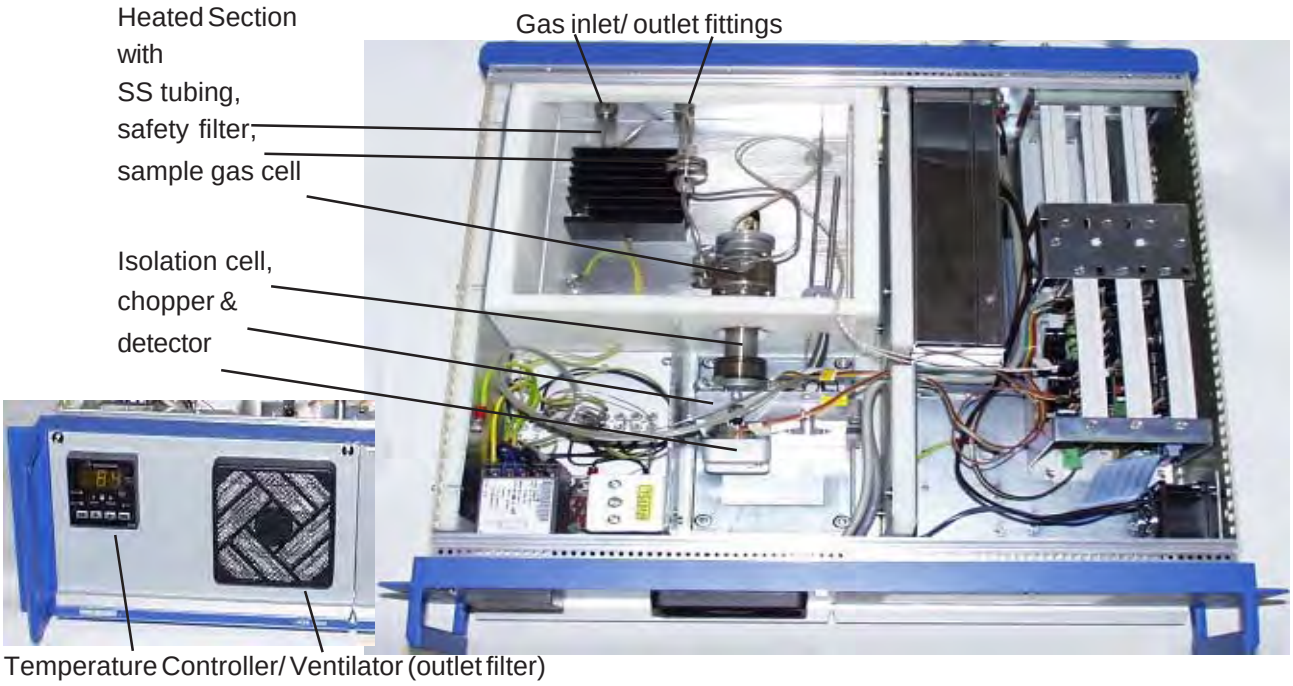

Fig. 1-23: MLT 3HT (example for high temperature measurement), Top/ front view

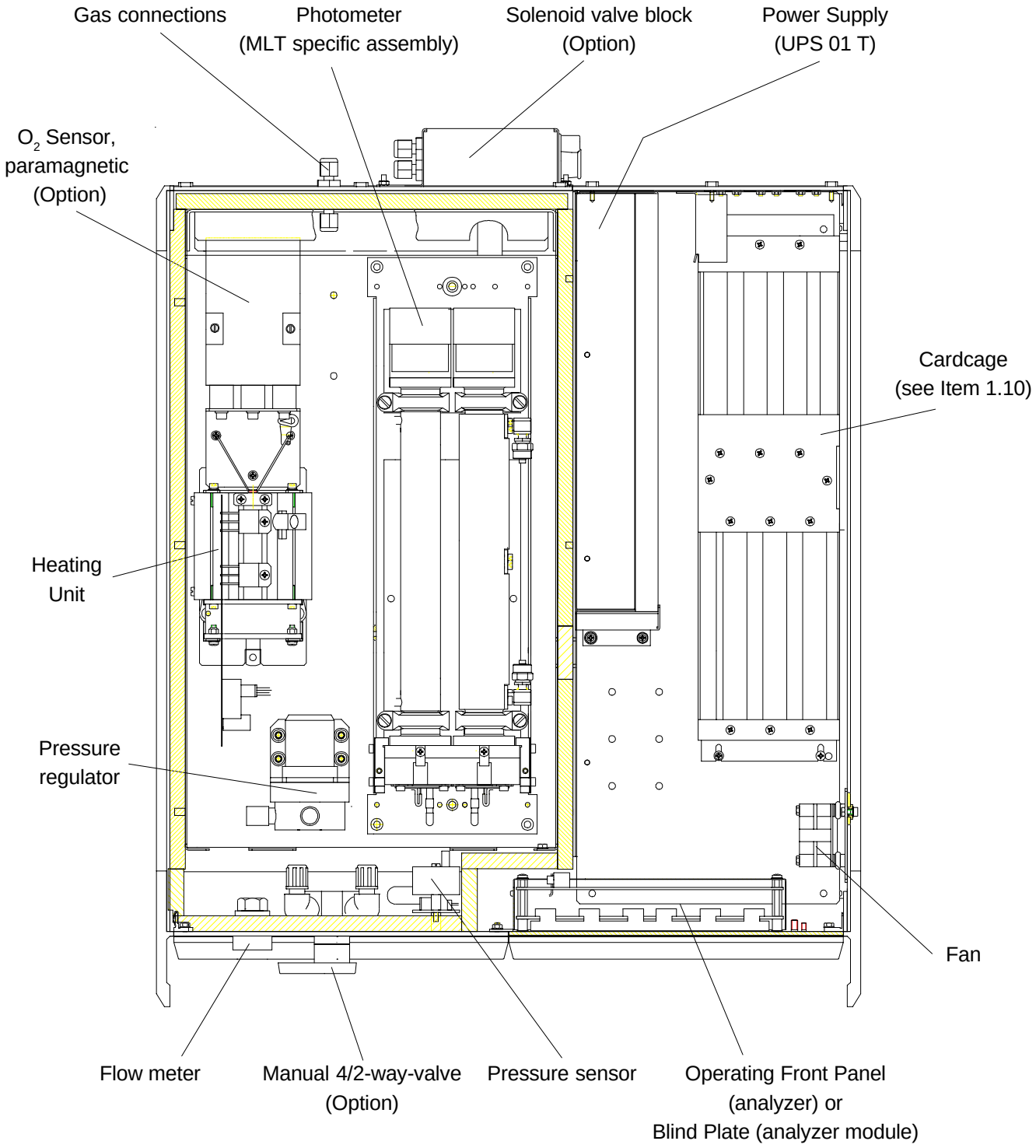

Fig. 1-24: MLT 3 (gas purity measurement), Top view

1.7 MLT 4

All components of analyzers or analyzer modules are incorporated into a 1/1 19" housing. The housings are available as rack mounting (R) or as table-top (T) versions. For analyzer modules there is mounted a blind plate instead of an operation front panel.
The equipment is specified for an operating voltage of 24 V DC (± 5 %).

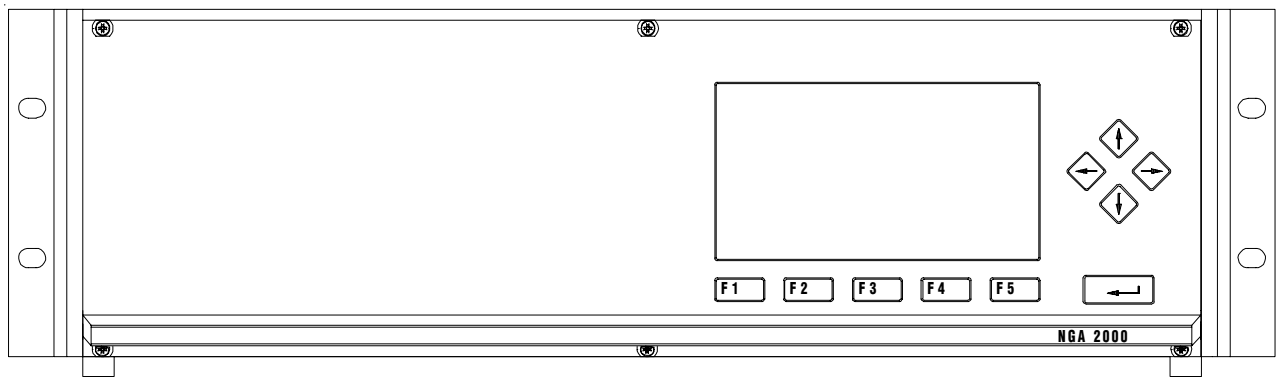

Fig. 1-25: MLT 4 (1/1 19" housing), front view

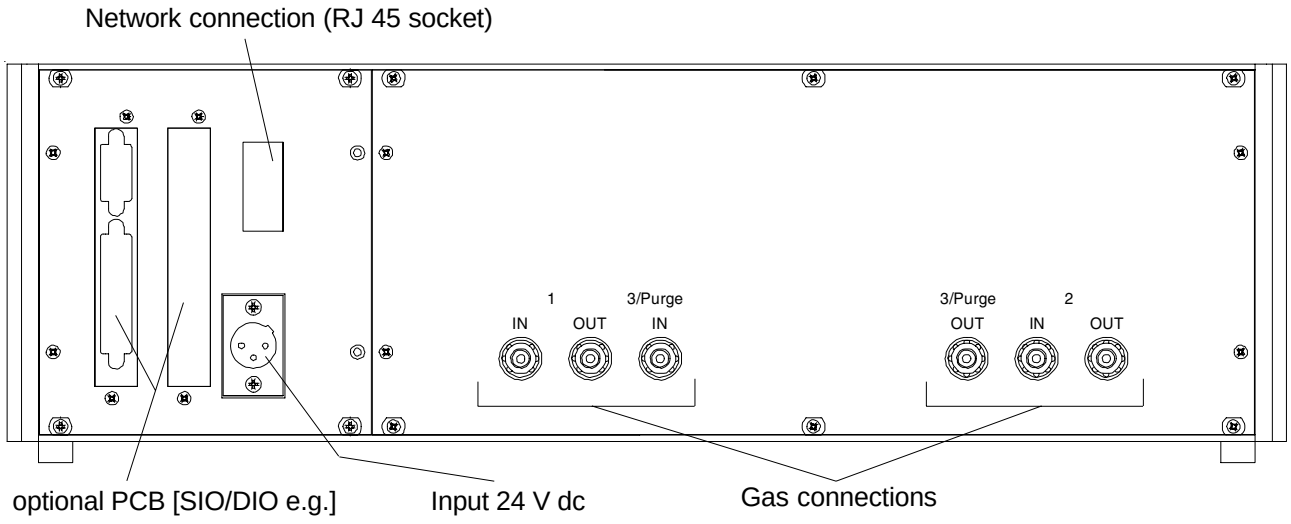

Fig. 1-26: MLT 4, Rear view

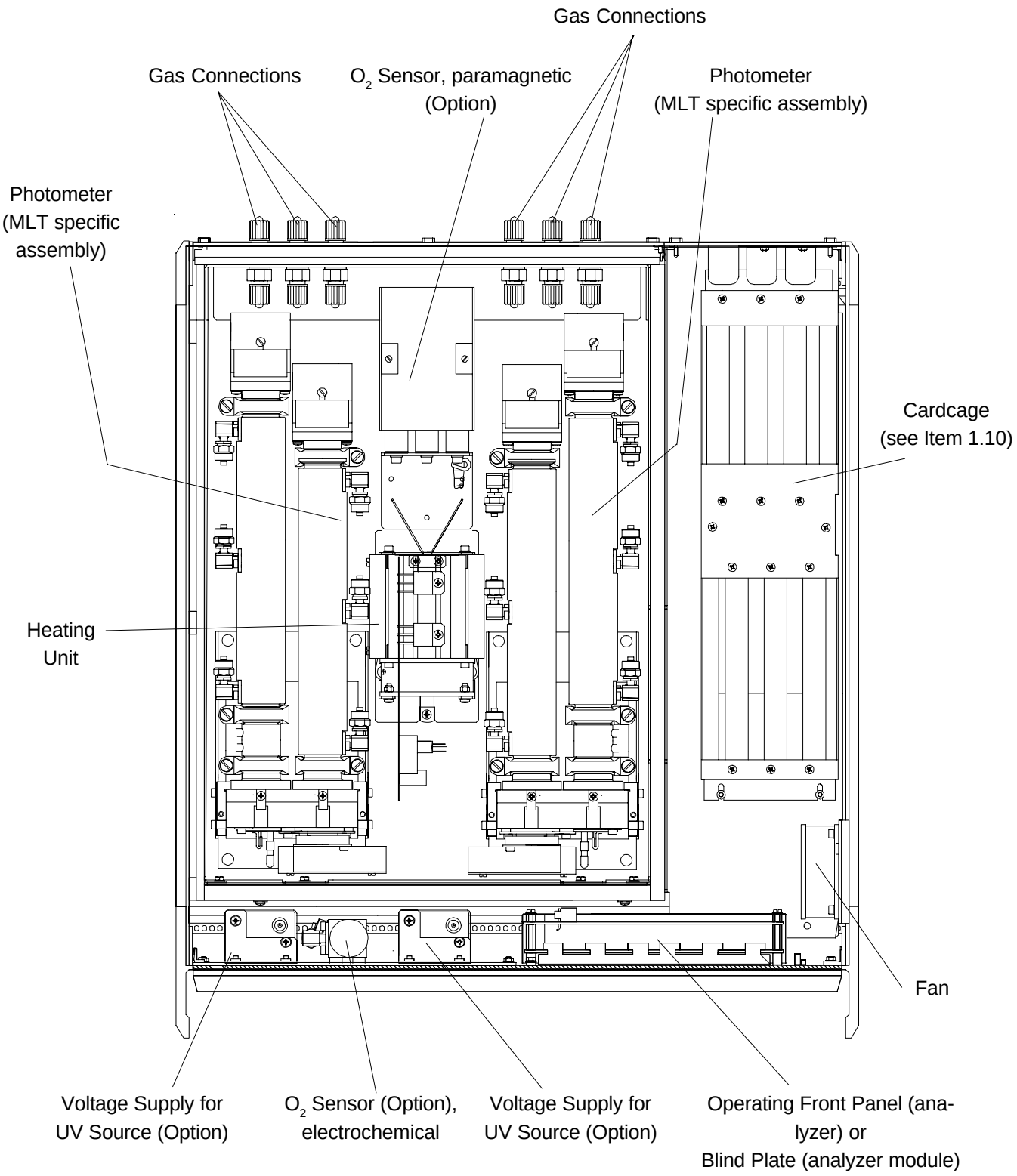

Fig. 1-27: MLT 4, Rack/Table-top Housing, Top view

1.8 CAT 200

The CAT 200 is an analyzer with flameproof enclosure, designed especially for operation in hazardous areas. It is approved to meet the requirements of the European Directive for equipment intended to be used in hazardous areas (commonly know as "ATEX 95“) and of the North American Standards (certified by the Canadian Standards Association, CSA International).
The enclosure meets IP 65 (optional: IP 66, tropicalisation), has robust design and is prepared for wall mounting. Therefore the analyzer may be used for general purpose applications requiring outdoor installation, too.

This current instruction manual covers using the CAT 200 analyzer for general purpose applications only!

Installation, startup and maintenance for operation in hazardous areas are described in detail in a separate instruction manual, shipped together with each such analyzer and are not subject of the current instruction manual!

Installed inside the flameproof enclosure an analyzer module holds all measuring components. As the module corresponds to a 1/2-19" MLT 1 analyzer/analyzer module, a CAT 200 analyzer offers almost the same options.
This analyzer model is supplied by an internal wide range power supply, automatically adapting to the voltage at site (Rated input voltage: 115-230 V∿ 50/60 Hz, Input voltage range: 85 - 264 V∿, 47 - 63 Hz).

Because of the intention to used in hazardous areas the front panel is located behind a safety glas window. The analyzer is touchless operated by using a magnetically tool, whereat the standard pushbuttons are replaced by sensor fields (see fig. 1-2).

All interface signals (partial options) are accessible on screw terminal blocks, located in a separate junction box. That applies to mains power supply, too.
Take care of the special installation instructions in chapter 5 "Installation“!
Located below the junction box is a second volume consisting of dome housing, extender housing and base, containing analyzer module, power supply unit, fuses and gas pipes (see fig. 1-28). All three parts of the enclosure are threated together. Unthreading the parts gives access to the internal components.

WARNING

Connection of mains and interface signals are to be established via internal screw terminal blocks. This requires working inside an opened analyzer, near by potentially live components!

Installation of this analyzer is allowed by qualified personnel only, familiar with the potential risks of working near live components!

The model CAT 200 does not provide a mains switch. A mains switch or circuit breaker must be provided in the building installation. This switch has to be installed near by the analyzer, must be easily operator accessible and has to be designated as disconnector for the analyzer.

The Junction Box must be protected by fuse supply which has a breaking capacity adjusted to the short circuit of the equipment. The 10 A fuse has to be installed in the building installation!

CAUTION

CAT 200 -- HEAVY INSTRUMENTS !

The analyzer variation CAT 200 intended to be wall mounted and/or outdoor installed weigh up to 70 kg, depending on included options!

Use two person and/or suitable tools for transportation and lifting these instruments!

Take care to use anchors and bolts specified to be used for the weight of the units!

Take care the wall or stand the unit is intended to be installed at is solid and stable to hold the units!

WARNING

Risk of electric shock!

CAT 200 analyzers provide earth connection terminals. To minimize risk of electric shock the enclosure must be connected to earth! Therefore connecting the analyzer is allowed only by using a 3 pole mains cable providing a separate earthing conductor.

Any interruption of the earthing conductor inside or outside the analyzer as well as loosening the earthing connection may cause serious injury! Intended interruption of earthing connections is not permissible!

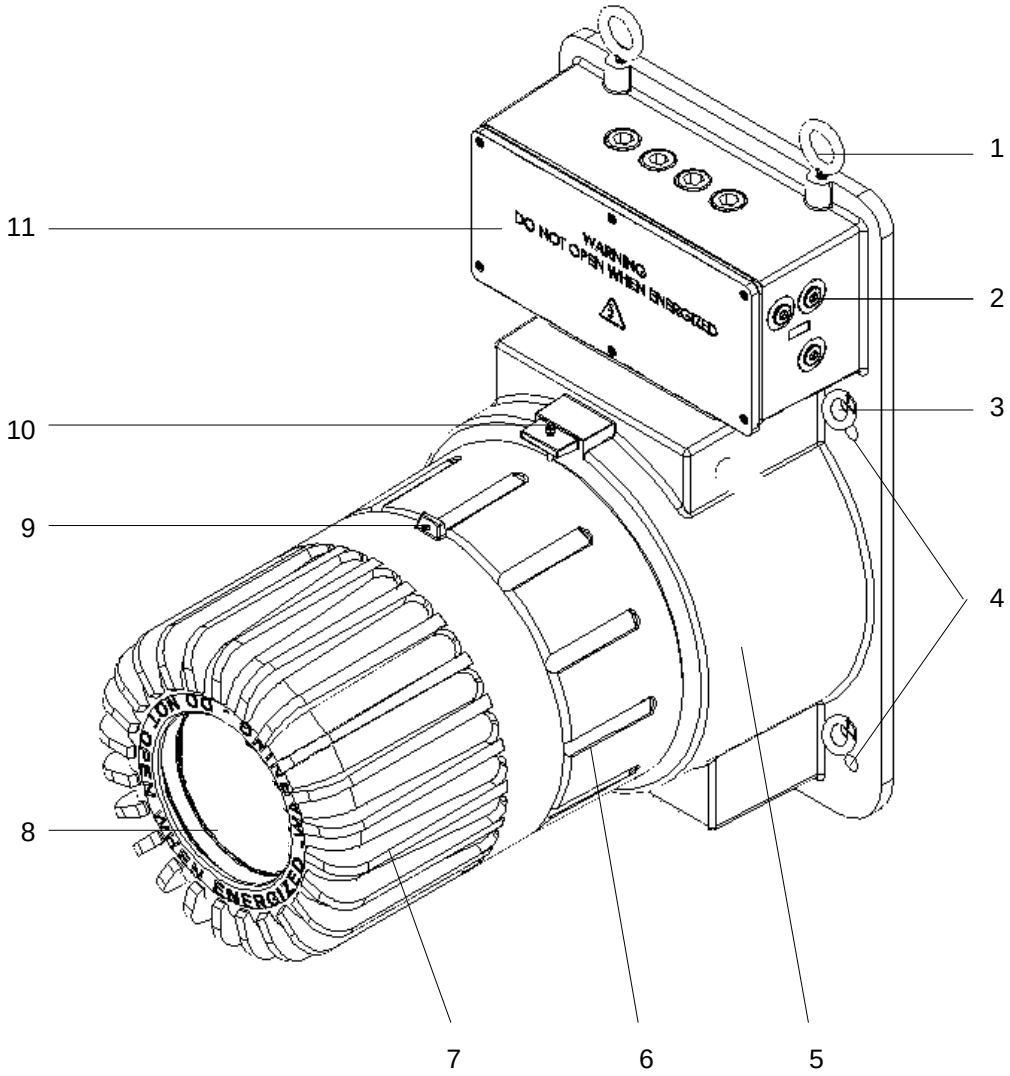

Fig. 1-28: CAT 200, Exterior view

1	Eye bolts (2 pcs)	7	Dome housing
2	Cable glands for signal cables (3 pcs max)	8	Front panel behind safety glass
3	Eye bolts (2 pcs)	9	Interlock screw
4	Mounting holes (4 pcs.)	10	Interlock screw
5	Base	11	Junction box
6	Extender housing		

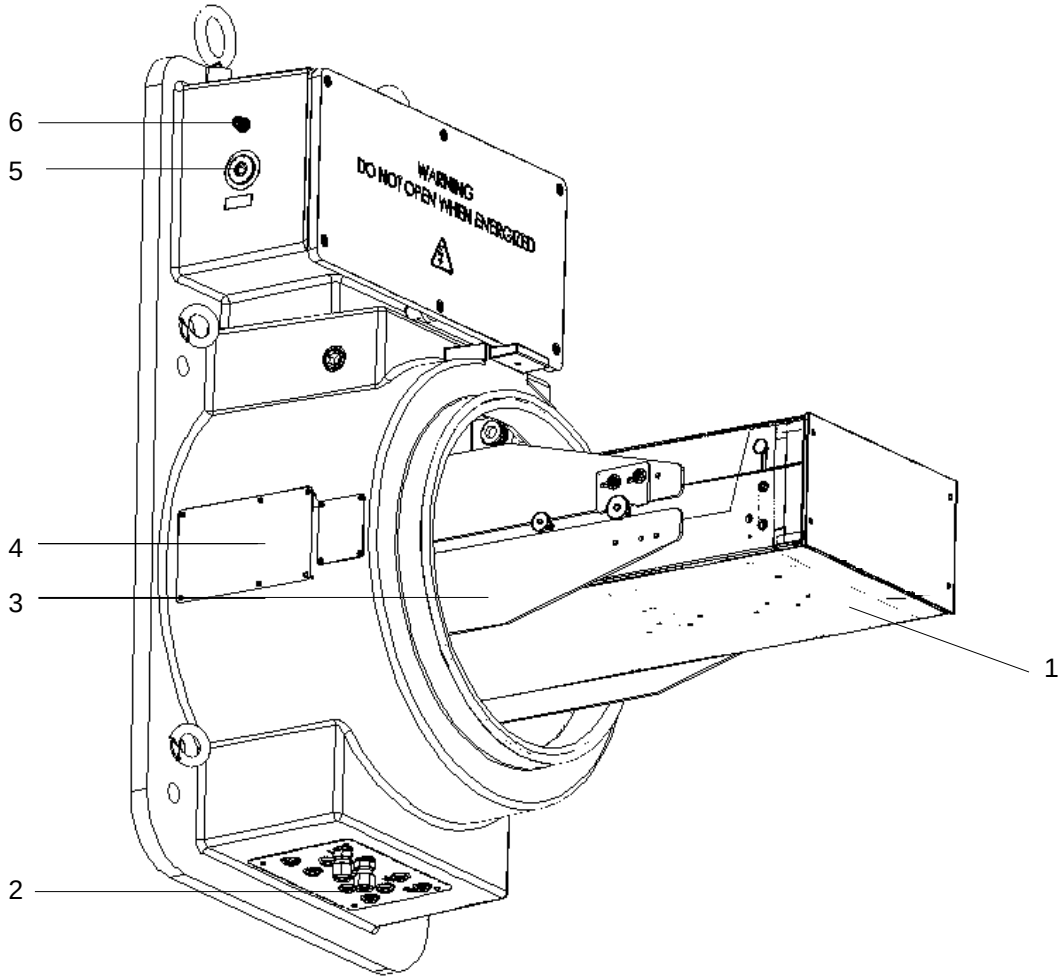

Fig. 1-29: CAT 200
(Dome and extender housing removed)

1	Analyzer module	5	Cable gland for mains cable
2	Gas fittings with internal flame arrestors	6	External earth connector
3	Bracket for analyzer module		
4	Nameplate label		

1.9 Internal Gas Paths

The materials used for the gas paths may be selcted to suit the intendend application. In marking such selection the diffusion rates of the individual gas components, their corrosivity, and the temperature and pressure of the sampled gas must be taken into account.

1.9.1 Gas Path Material

The physical and chemical properties of the sampled gas and the operating conditions (temperature and pressure) of the analyzer determine the materials which may be used for gas paths and gas fittings.

Fittings

For standard the analyzers are provided with PVDF fitting, 6/4 mm. The analyzers can to be delivered with swagelok® fittings, stainless steel, 6/4 mm or 1/4" as option.
Additional fittings to be delivered on request, consult factory.

Tubing

For standard the analyzers are provided with Viton tubing or PVDF tubing (6/4 mm).
Additional tubings (e.g. stainless steel) to be delivered on request, consult factory.

1.9.2 Gas Path Layout (internal tubing)

The principle various possible layouts of the internal gas lines are summarized in the table 1-1.

tubing in series	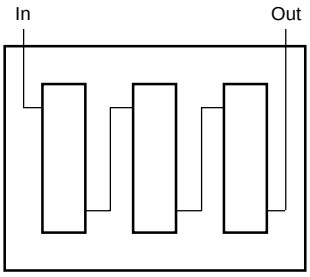
tubing in parallel	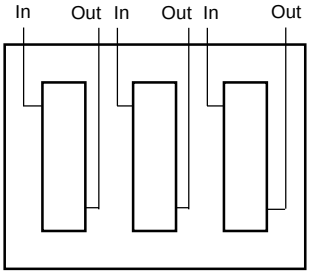
combined tubing: series and parallel (special tubing)	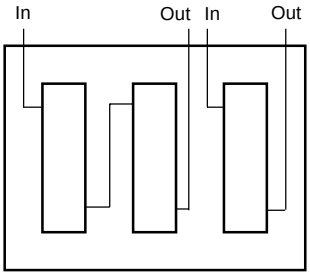
ULCO special tubing: <u>external</u> in series, <u>internal</u> parallel	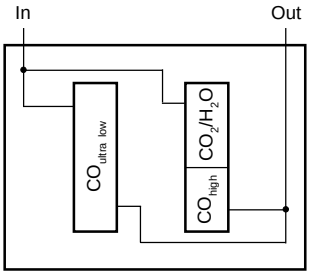 <u>Note:</u> Tubing must not be changed by customer !

Table 1-1: Possible internal tubings *(examples with 3 measuring channels)*

1.9.3 MLT 3 (gas purity measurement)

The necessary gas connections are marked analyzer specific (see section 5.3.and 5.4.3.1). Different possibilities of internal layout and external tubing are shown in Fig. 1-30, depending on instrument specific features.
Up to the internal pressure regulator the gas paths are designed as stainless steel tubings. Behind the flow meter the gas paths are viton tubings.

All external fittings are swagelok®, stainless steel, 6/4 mm, 1/8 " or 1/4 ".

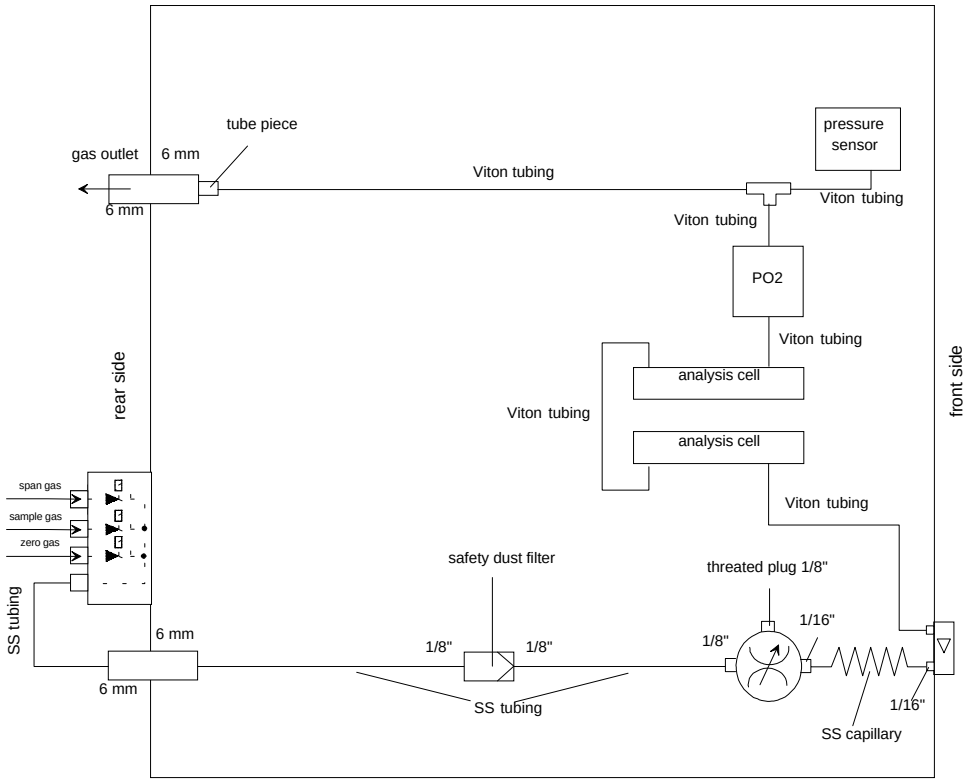

Fig. 1-30a: MLT 3 (gas purity measurement), gas path layout
(3 measuring channels with solenoid valve block option)

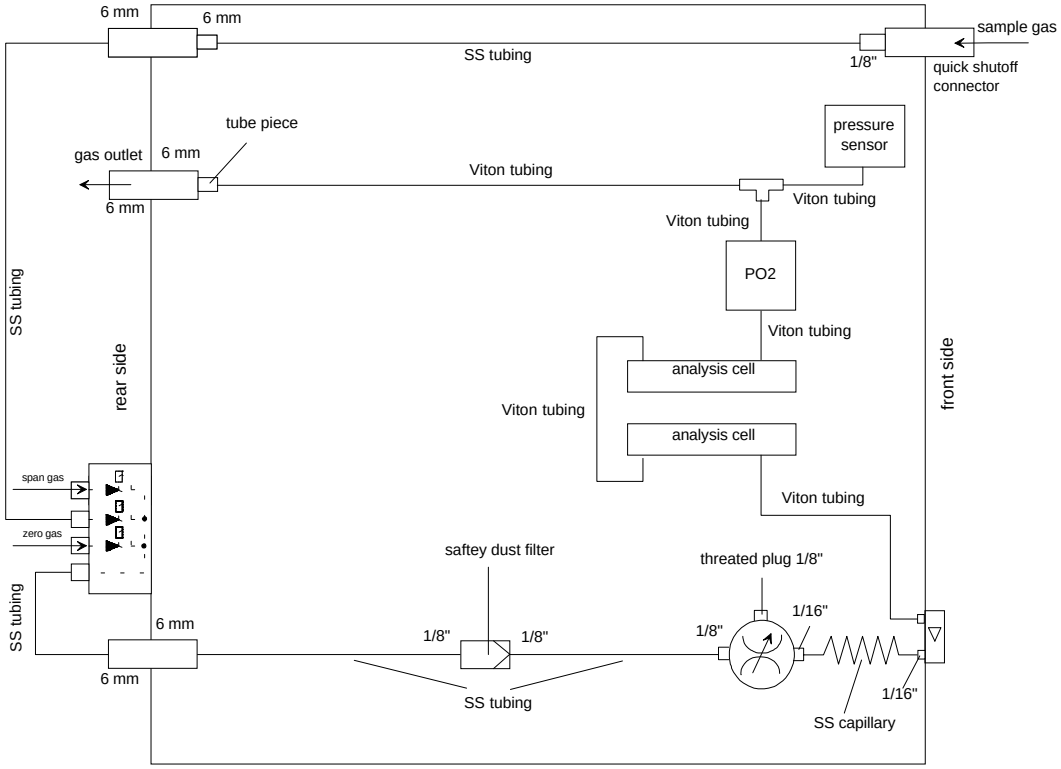

Fig. 1-30b: MLT 3 (gas purity measurement), gas path layout
(3 measuring channels with solenoid valve block option and quick shuttoff connector option)

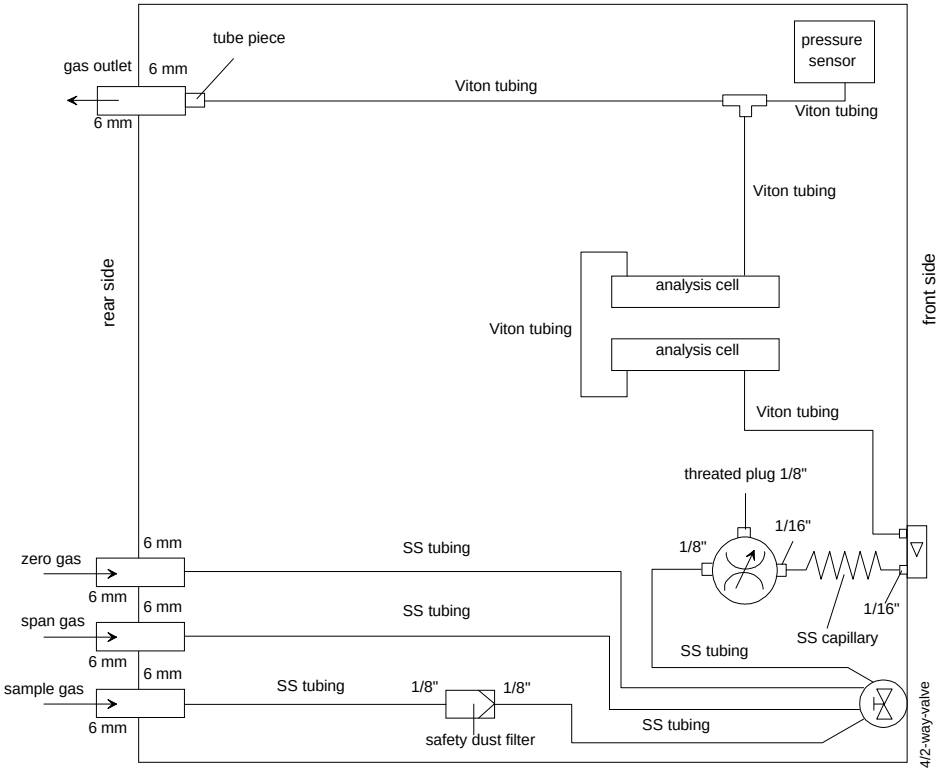

Fig. 1-30c: MLT 3 (gas purity measurement), gas path layout
(2 measuring channels with manual 4/2-way-valve option)

1.10 Printed Circuit Boards

All necessary PCBs are pushed in into a cardcage, which is identically for all MLT versions (see Fig. 1-31).

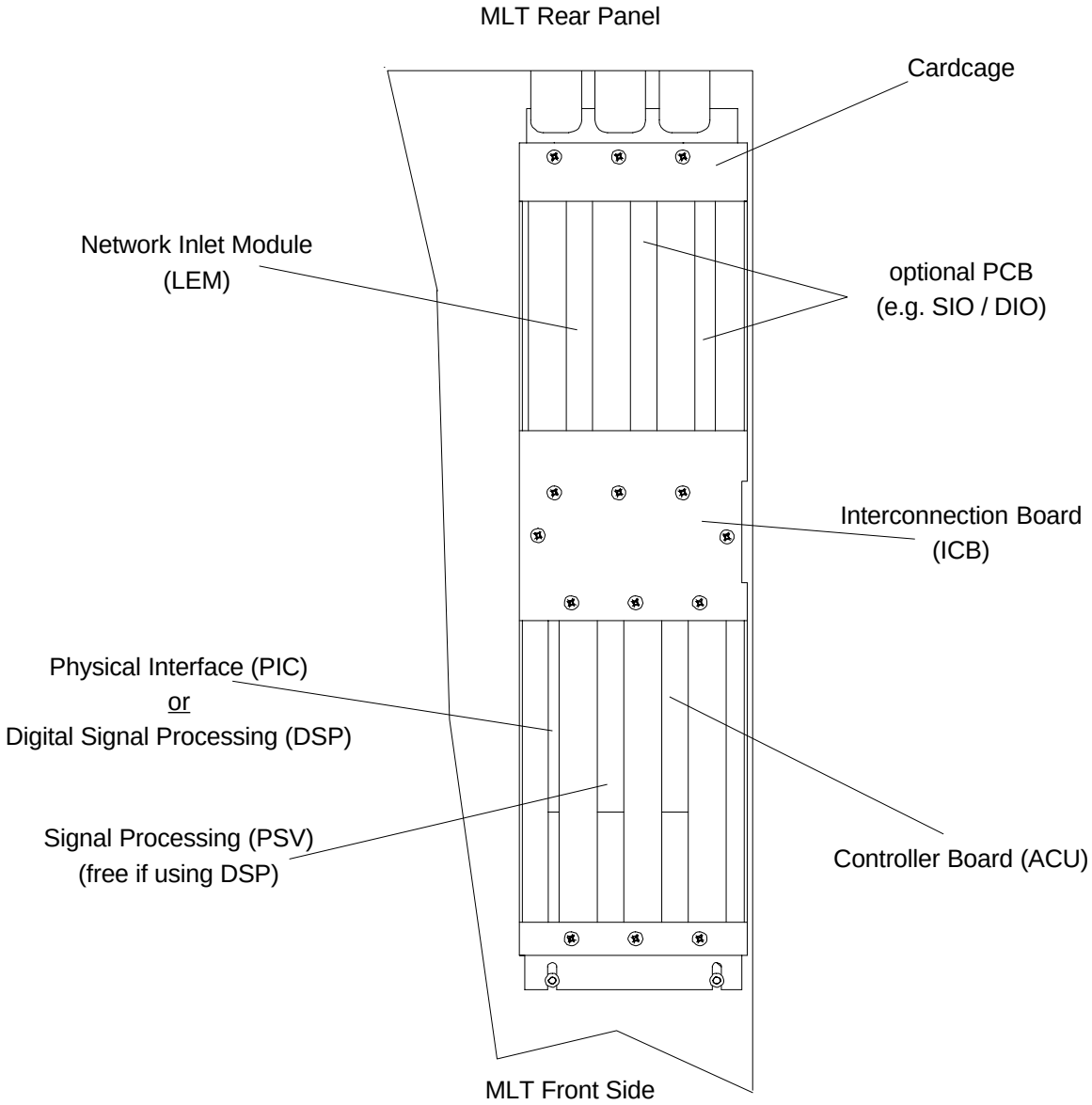

Fig. 1-31a: Cardcage MLT 1/3/4, Top View

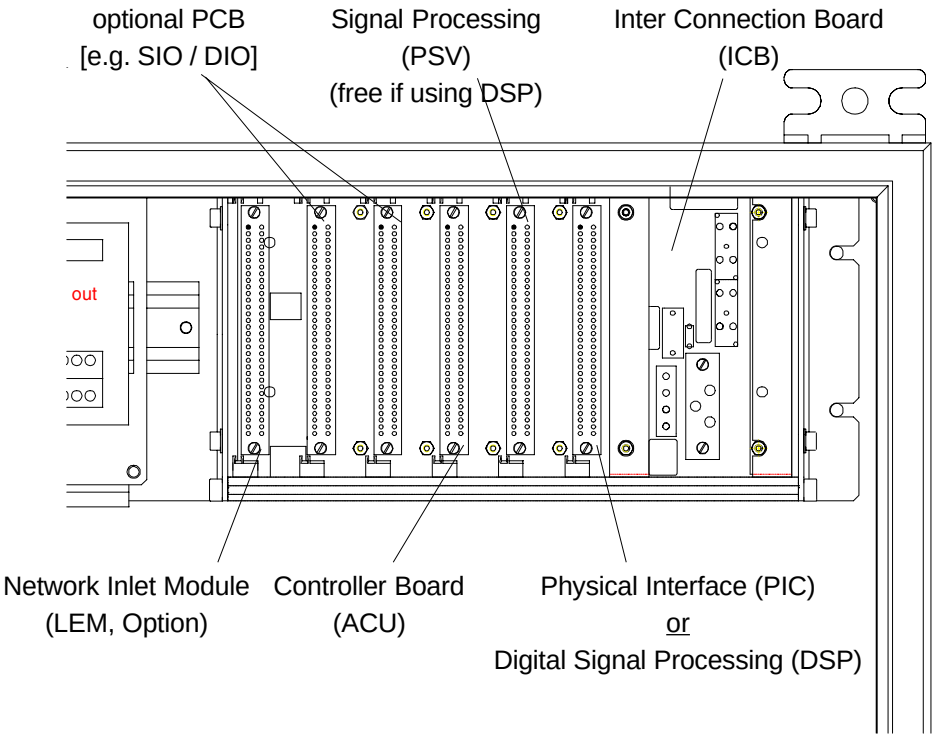

Fig. 1-31b: PCB arrangement MLT 2
[Inside view, detail (without front panel)]

1.10.1 ICB (Inter-Connection Board)

ICB is an interconnection board consisting of six 64-pin ICB bus slots to accommodate printed circuit boards (PCB of Euro standard format).

1.10.2 PSV/PIC Combination

The PSV card (signal processing) carries out the A/D conversion and the real evaluation of each measuring signal.
The PIC card (Physics Interface Card, page 1-38) supplies the photometer components and the individual sensors with the individual required operating voltages and transmits all measuring signals to the signal processing unit PSV.

1.10.3 DSP (alternitavely to PSV/PIC Combination)

The DSP card (Digital Signal Processing) page 1-39) supplies the photometer components and the individual sensors with the individual required operating voltages and carries out the A/D conversion and the real evaluation of each measuring signal.

1.10.4 PIC (Physics Interface Card)

The PIC card (Physics Interface Card) supplies the photometer components and the individual sensors with the individual required operating voltages and transmits all measuring signals to the signal processing unit PSV.

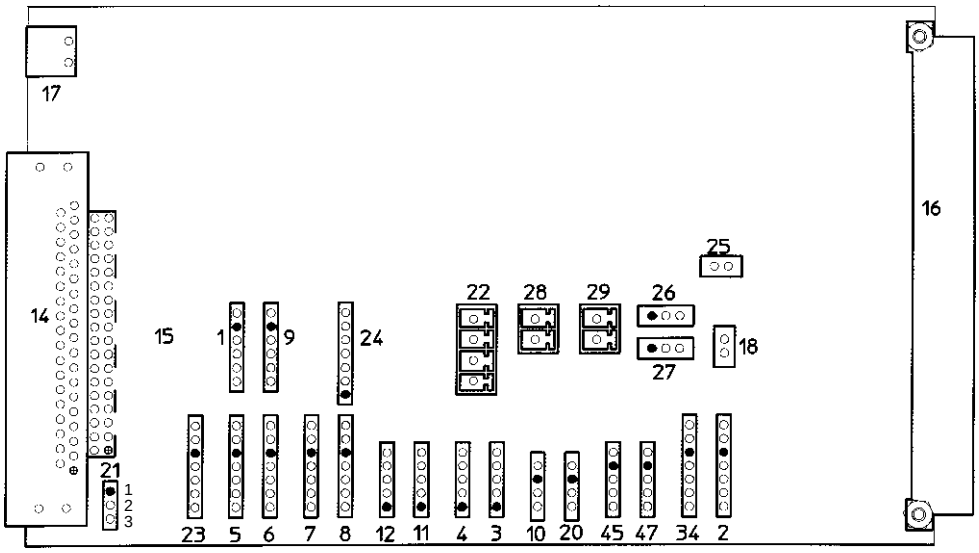

Fig. 1-32: Plug pin assignment PCB PIC

The plugs shown in Fig. 1-20 are used as follows:

Plug No.	used	Plug No.	used
34	Chopper 1 (channel 1+2)	1	Pressure senor 1
2	Chopper 2 (channel 3+4)	9	Pressure senor 2
47	Flow sensor 1		
45	Flow sensor 2	24	PCB OKI (P2) Flow sensor 3
20	Temperature sensor 1 (chopper 1)		PCB OKI (P1) Flow sensor 4 (P1)
10	Temperature sensor 2		or
3	Source channel 4		PCB OKI (P4) Temperature sensor 3
4	Source channel 3		PCB OKI (P3) Temperature sensor 4
11	Source channel 2		
12	Source channel 1	21.2	Testpeak channel 1
8	Detector channel 4	21.3	Ground (⊥)
7	Detector channel 3		
6	Detector channel 2		
5	Detector channel 1		
23	Detector channel 5 (O_2 or H_2)		

1.10.5 Digital Signal Processing Card (DSP)

Instead of using the 2 PCB's PIC and PSV alternatively those can be replaced by ONE board containing both functions in the Digital Signal Processing Board DSP.

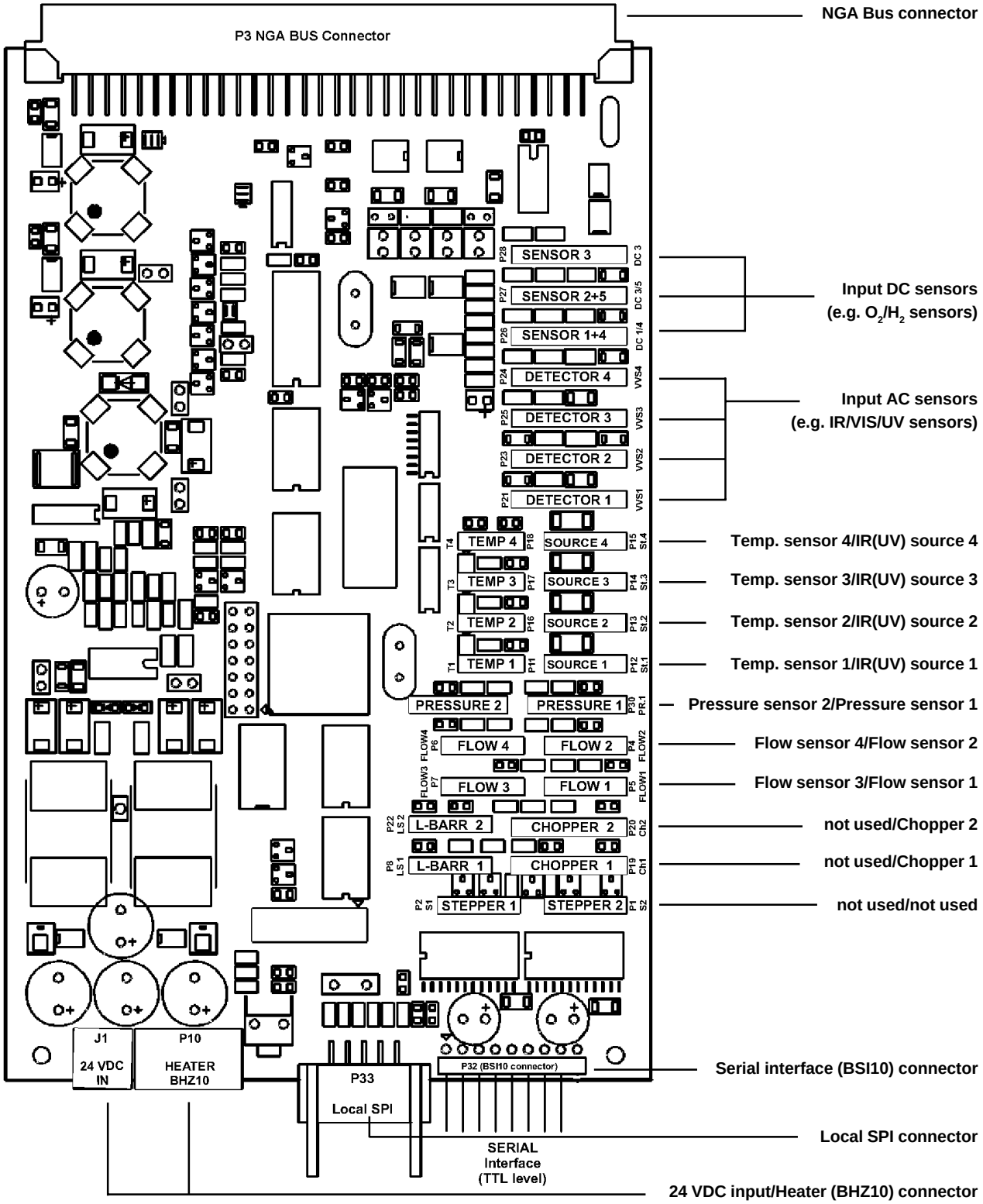

Fig. 1-33: Plug pin assignment PCB DSP

1.10.6 ACU

The ACU 02 board is the main part of the MLT both Analyzer Module or Analyzer!
It is a one-board CPU card.
All user data are safe loaded via a battery buffer, even when the voltage supply is disconnected.

This card contains the complete software for controlling and operating the analyzer module.
For MLT analyzers (with operation front panel) additional the Control Module Software [platform (CM) functions (network managment, LCD display control e. g.)] is included.

The board contains the following function blocks:

- 32 / 16-bit micro controller
- Floating point co-processor
- dependent on platform version different RAM / Flash-EEPROM
  (Standard: 1 MB RAM extension for up to 15 software channels*); Option: additional 0.5 MB RAM extension if more than 15 software channels*) [contact factory if more than 20 SW channels are requested])
- Real-time Clock with
  Calendar function
  Alarm function
- Watchdog function
- Serial interface RS 232 C
- A network interface with ECHELON chip
- System bus:
  Parallel bus A6 : D8
  12 TPU wiring
  network bus
  Synchron serial bus
- Buffered parallel interface for LCD control
- Local bus interface (e.g. storage extension)
- Switch-mode power supply for 5 V supply (on board)

*) Calculate software channels (SW) as follows: MLT = 1 SW ch. for each mesuring channel;
all other NGA analyzer modules like CLD, FID, etc. = 1 SW ch.; SIO/DIO = zero SW ch.; Network I/O's = 1/2 SW ch.

1.10.7 SIO (Standard Inputs-/Outputs)

Every platform, every MLT analyzer or every MLT analysis module can be equipped with max. 1 SIO (see table P-1, too)!
At mounting into a platform or an analyzer the SIO serves system functionallity of I/O´s and supports all analysis modules of the NGA system.
Only the analysis module itself is supported at mounting into an analysis module.
To the programming we refer to the accompanying software instruction. The pin assigments are described in section 21 of this instruction.

The SIO as standard consists of:

- 2 galvanically isolated analogous outputs
  Simultaneous 0(4) - 20 mA (± 22 mA, burden < 500 Ω) and
  0(2) - 10 V (± 11 VDC, burden > 2 kΩ)

- 3 relay outputs
  Load max. 30 V/1 A/30 W

- 1 serial interface (over extension card SIF)
  RS 232 (standard) or RS 485 (option, 2-wire or 4-wire)

Every SIO can be upgraded on 4, 6 or 8 analogous outputs via respective SIA modules with two analogous outputs each.

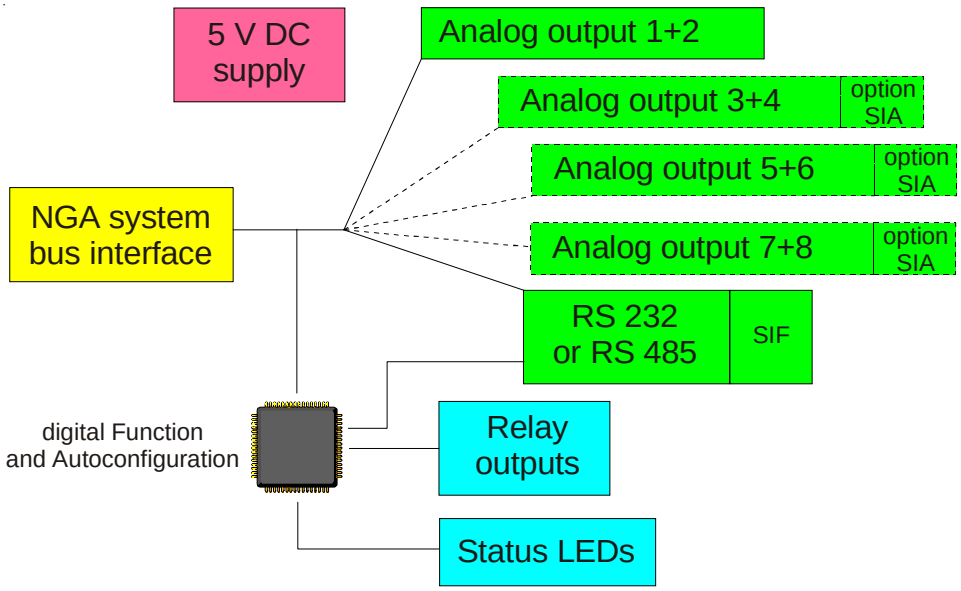

Fig. 1-34: Function blocks of SIO-PCB

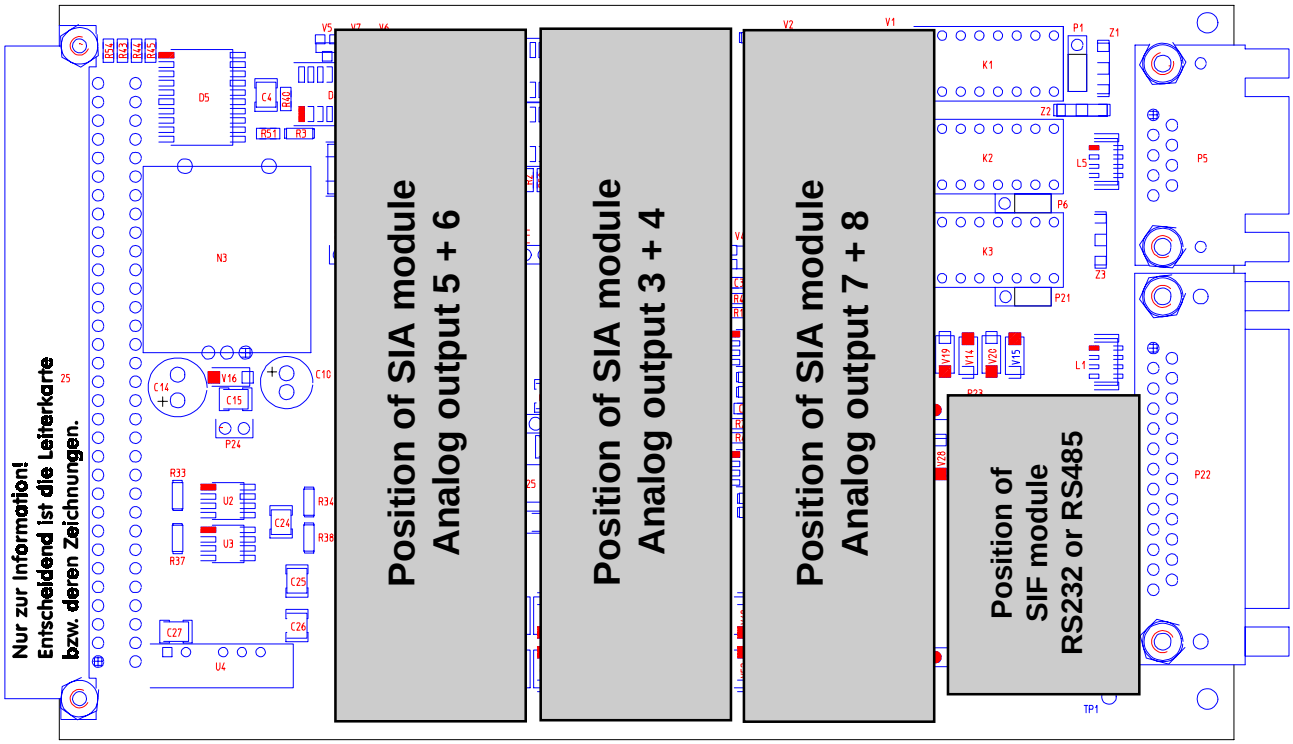

Fig. 1-35: SIO-PCB with extension cards

1.10.8 DIO (Digital In-/Outputs)

Every platform can be equipped with max. 1 to 5 DIOs. Every MLT analyzer or every MLT analysis module can be equipped with max. 1-2 DIOs (see table P-1, too)!
For maximum assembly with DIOs (5 or 2 DIOs resp.) there is no place for SIO PCB!
At mounting into a platform or an analyzer the DIO serves system functionallity of I/O´s and supports all analysis modules of the NGA system.
Only the analysis module itself is supported at mounting into an analysis module.
To the programming we refer to the accompanying software instruction. The pin assigments are described in chapter 21 of this instruction.

On DIO PCB are integrated:

- 8 digital Inputs,
  5 - 30 VDC / 2,2 mA
  Low level: 0,3 - 3,0 VDC / High level > 4 VDC

- 27 digital Outputs,
  5 - 30 VDC / max. 500 mA

1.11 Network Termination

The network module LEM (see Fig. 1-19) connects the analyzer with external modules via network. RJ 45 sockets are serving for network interconnection between analyzer or platform and analyzer modules (see Fig. 1-8, 1-13, 1-20, 1-23 and 1-31b).

It is necessary to terminate the ends of a twisted pair bus to minimize reflections (see Fig. 1-37). Failure to terminate the bus will degrade network performance.
Termination will be done via RJ 45 connectors (see Fig. 1-36).

Fig. 1-36: RJ 45 network termination connector

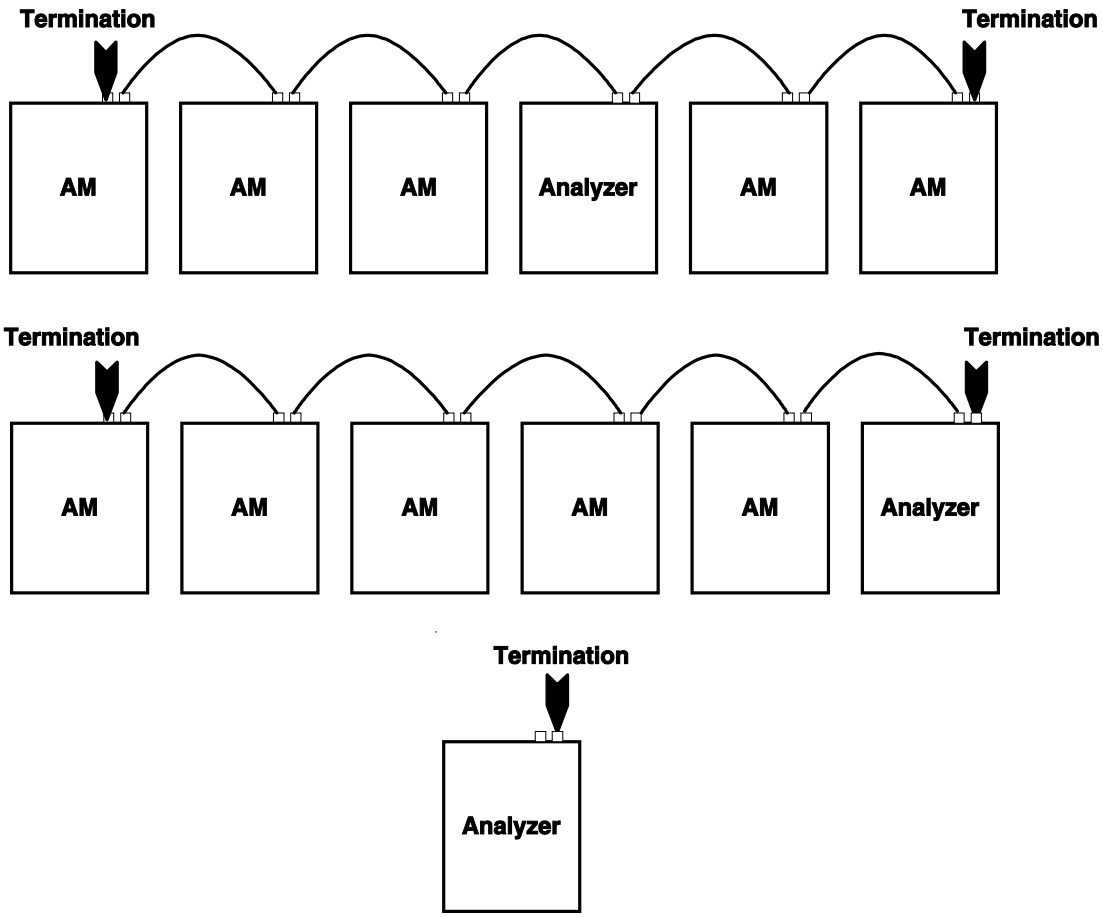

Fig. 1-37: Network termination *(examples)*

1.12 Specifications at the Nameplate Label

The analyzer nameplate label gives important information about the instrument‘s configuration, installed measuring principle(s), sample gas(es) and measuring range(s).
In case an instrument is built according a suitability approval the related certificate number is given, too.
The nameplate label is located either on the instruments left or right housing side or at the inner side of the front door (MLT 2).
The CAT nameplate label is located at the housings left side whereat the label as it is shown below is affixed to the inner analyzer module.

Fig. 1-38: Analyzer Nameplate Label (example)

All analyzer versions are marked as follows:

MLTx y-CH1 CH2 CH3 CH4 CH5
with

x = analyzer type — 1, 2, 3, 4, 5, CAT 200 with
1 = 1/2 19", not thermostatted, external power supply
2 = Field housing, thermostatted, internal power supply
3 = 1/1 19"-housing, thermostatted, internal power supply
4 = 1/1 19"-housing, thermostatted, external power supply
5 = 19", 18 to 21 HU housing, thermostatted, internal power supply
CAT 200 = flameproof enclosure

y = analyzer version — T, M, A, R, TE, ME, AE, RE with
T = table top
M = analyzer module, platform mounting (net/electr. connections from front side only)
A = analyzer module, external installation or platform mounting (net/electr. connections from rear side or front side)
R = rack mounting
E = extended housing (MLT 1 only)

CH1...5 = measuring method of the individual (max. 5) measuring channels with
IR = measurement at infrared spectral range
UV = measurement at ultraviolet spectral range
VIS = measurement at visual spectral range
PO_2 = paramagnetic oxygen measurement
EO_2 = electrochemical oxygen measurement
TC = thermal conductivity measurement
TEO_2 = trace electrochemical oxygen measurement

1.13 MLT 2HT (high temperature measurement)

As a special version MLT 2HT is available for measurements requiring physics thermostated up to 120 °C. The physical compartment is parted into 2 sections:

- A high temperature (HT) part with special heating and isolation for all components being in contact with sample gas - SS tubing/fittings, fine dust/safety filter, needle valve, calibration valve (depending on options). The heated lines are connected in the heated room with sample gas inlet and outlet fittings.
- The isolation (filter) cell, chopper & detector are located in the lower physical part but outside of the heated room (need protection from high temperature).

The temperature controller is located in the upper electronical section.

An optional external pump with heated pump head may be located outside of the analyzer being connected with heated samplegas lines (need of isolation at any connection/ fitting).

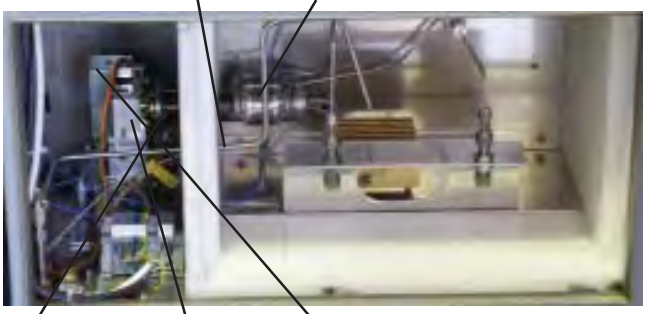

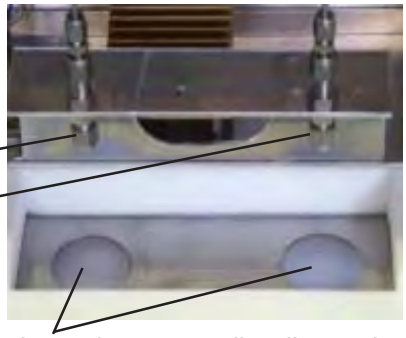

2. Measuring Principle

Depending on analyzer model different measuring methods will be used.

2.1 IR Measurement

The measuring effect devided from absorption of infrared radiation is due to the gas being measured. The gas - specific wavelengths of the absorption bands characterize the type of gas while the strength of the absorption gives a measure of the concentration of the component measured. Due to a rotation chopper wheel, the radiation intensities coming from measuring and reference side of the analysis cell produce periodically changing signals within the detector.

The detector signal amplitude thus alternates between concentration dependent and concentration independent values. The difference between the two is a reliable measure of the concentration of the absorbing gas component.

The principle photometer assembly is shown in Fig. 2-1.

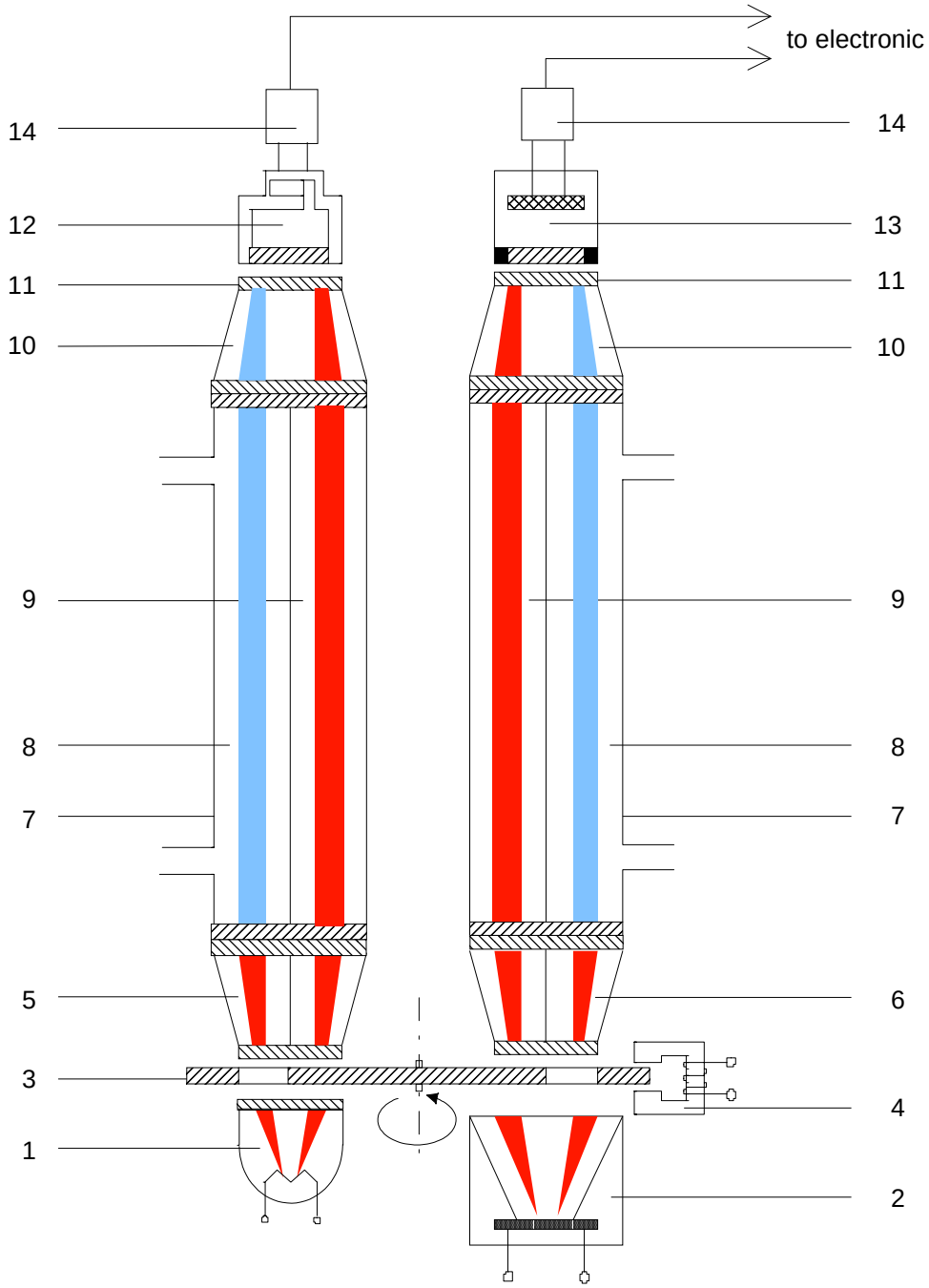

Fig. 2-1: Measuring Principle for NDIR / UV Measurement

1 IR source with reflector
2 VIS / UV source with reflector
3 Chopper wheel
4 Eddy current drive
5 Filter cell with dividing wall (IR channel)
6 Filter cell with dividing wall (UV channel)
7 Analysis cell
8 Measuring side
9 Reference side
10 Filter cell without dividing wall (for IFC measurement with optical filters)
11 Window
12 Pneumatic or pyroelectrical (solid-state) detector
13 VIS / UV semiconductor detector
14 Preamplifier

2.1.1 Opto - Pneumatic Measuring Principle

For measurement a heating coil in the light source generates the necessary infrared radiation (1). This radiation passes through the chopper wheel [light chopper wheel (3)].
Due to the special shape of the chopper wheel, the IR radiation passes through a filter cell (5) and alternatively reaches the measuring side (8) and reference side (9) of the analysis cell [(7) separated in the middle into two halves by an internal separating wall] with equal intensity.
The filter cell (5) screens interfering radiation areas out of the radiation spectrum.

Behind this analysis cell the radiation passes a second filter cell (10) towards the gas detector (12), which compares the IR radiation intenisities from measuring side and reference side and converts it into an AC voltage signal.

The detector (Fig. 2-2) consists of a gas-filled absorption chamber and a compensation chamber which are connected together via a flow channel.
In principle the detector is filled with the infrared active gas to be measured and is only sensitive to this distinct gas with its characteristic absorption spectrum. The absorption chamber is sealed with a window which are transparent for infrared radiation [usually CaF_2 (Calcium fluoride)].

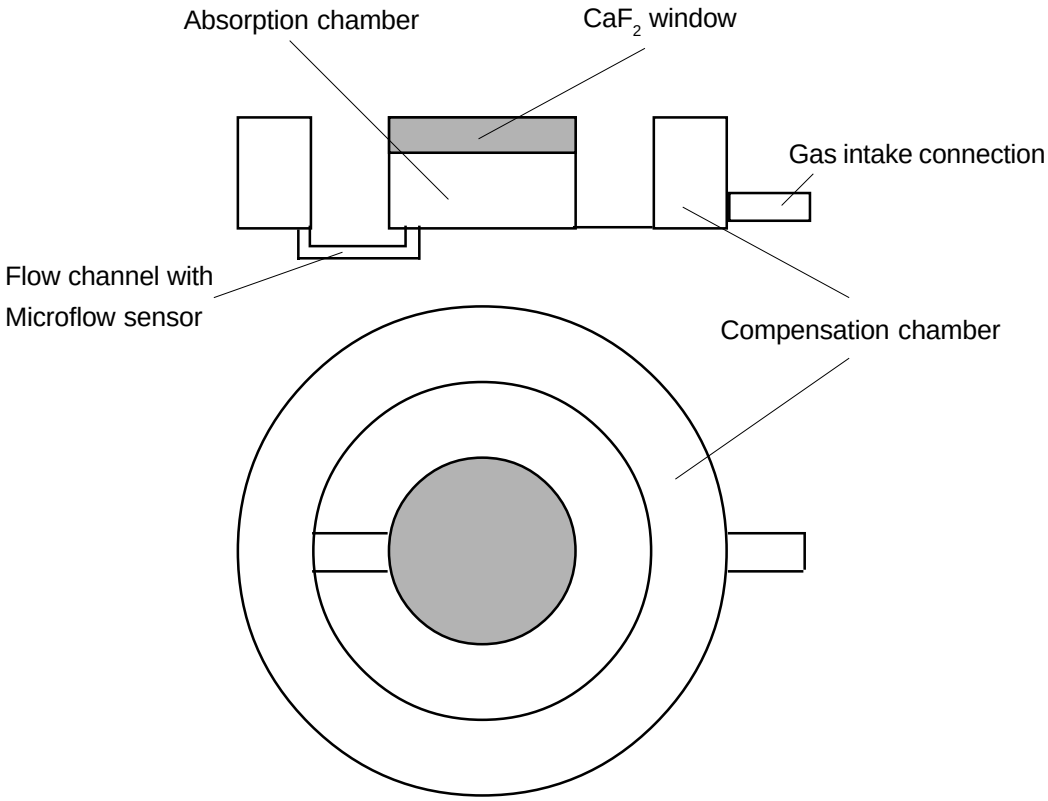

Fig. 2-2: Principle Design of Gas Detector

When the IR radiation passes through the measurement side of the analysis cell into the detector, a part of it is absorbed depending on gas concentration. Absorption chamber gas become colder, gas pressure in the absorption chamber is reduced and some gas of compensation chamber passes through the flow channel into the absorption chamber.

When the IR radiation passes through the reference side of the analysis cell into the detector, no preabsorption occurs. Thus the gas inside the absorption chamber is heated, expands and some of it passes through the flow channel into the compensation chamber.

The flow channel geometry is designed in such a way that it hardly impedes the gas flow by restriction. Due to the radiation of chopper wheel, the different radiation intensities lead to periodically repeated flow pulses within the detector.

The microflow sensor evaluates this flow and converts it into electrical voltages.
The electronics, which follow, evaluate the signals and convert them into the corresponding display format.

In addition to simply light chopper, the chopper wheel has a special structure for measuring side and reference side, that simulates an absorption in the analysis cell. This absorption signal is be cut out of the normal measuring signal and is be used for automatically sensitivity control. The result is a high long-term stability of sensitivity.

2.1.2 **Interference Filter Correlation** (IFC Principle)

The undivided analysis cell is alternately illuminated with filtered light concentrated in one of two spectral separated wave length ranges. One of these two spectrally separated wave length bands is chosen to coincide with an absorption band of the sample gas, and the other is chosen such that none of the gas constituents expected to be encountered in practice absorbs anywhere within the band.

The spectral transmittance curves of the interference filters used in the MLT and the spectral absorption of the gases CO and CO_2 are shown in Fig. 2-3. It can be seen that the absorption bands of these gases each coincide with the passbands of one of the interference filters.

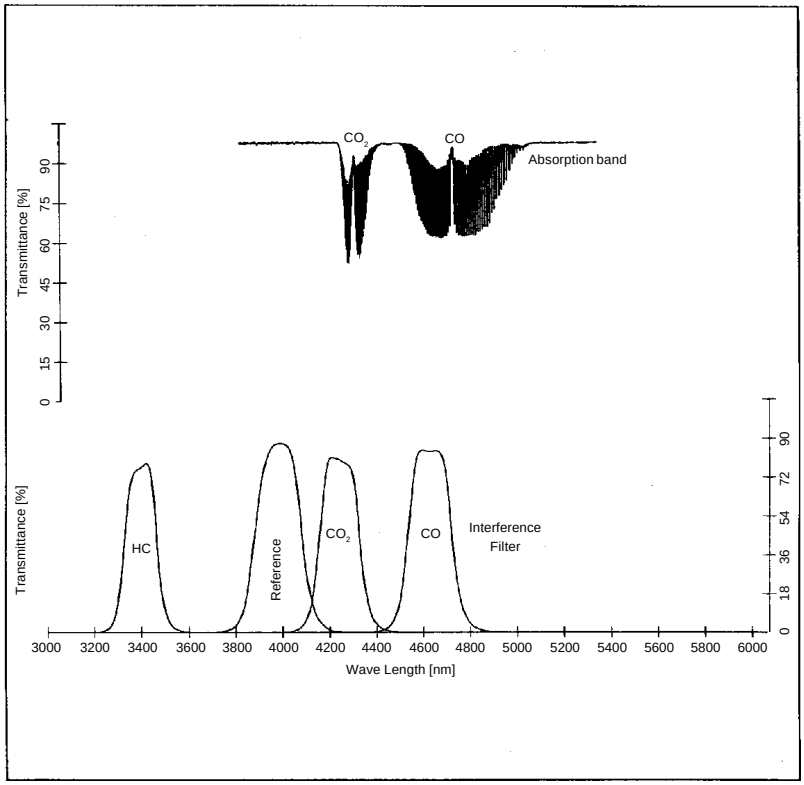

Fig. 2-3: Absorption Bands of Sample Gases and Transmittance of the Interference Filters used

The interference filter, used for generating a reference signal, has its passband in a spectral region where none of these gases absorb. Most of the other gases of interest also do not absorb within the passband of this reference filter.

The photometer assembly is similar to the assembly with “gas detector” (Fig. 2-1) with the exception of the analysis cell. For analysis cell a non-sparated version is used. Behind this analysis cell the radiation passes a second filter cell (10) to the pyroelectrical detector (12). In front of this filter cell there are the individually optical filters.

The detector records the incoming IR radiation. This radiation will be reduced by the absorption of the gas in the analysisi cell at this wavelength. The comparison between the measuring wavelength and reference wavelength leads to an alternating voltage signal. This signal results from cooling and heating the pyroelectrical material.

2.2 UV Measurement

The absorption measurement in the UV spectral range is based on the same principle as the IR measurement (Fig. 2-1).

A glow-discharge lamp [2] is used as radiation source.
The UV radiation passes through the chopper [3] and a filter cell [6] into the dual-section analysis cell [7].

A second filter cell [6] is installed after the analysis cell. The photodetector [13], which follows, converts the pulsating radiation intensities from measuring [8] and reference side [9] of the analysis cell into electrical voltages.

As the glow-discharge lamp needs a specific and as constant as possible temperature, the UV lamp is thermostatted to about 55 °C for MLT 1 or the lamp is built-in into a thermostatted ambiente (MLT 2/3/4).

2.3 Oxygen Measurement

Depending on analyzer model different two measuring methods will be used.

2.3.1 Paramagnetic Measurement (PO_2)

Oxygen measurement is based on the paramagnetical characteristics of Oxygen molecules:
Two nitrogen filled quartz spheres (N_2 is not paramagnetic) are arranged in a dumbbell configuration and, hinged to a platinum wire, placed inside a cell. Fixed to the wire a small mirror reflects a light beam to a photo detector (fig. 2-4).
The measuring cell is placed inside an inhomogeneous magnetical field generated by a strong permanent magnet of specific design.
Oxygen molecules within the sample gas now due to their paramagnetic characteristics are deflected into the area of highest field strength. This generates different forces on both spheres and the resulting torque turns dumbbell and mirror out of the rest position. This generates a photodetector signal because the beam is deflected, too.
Initiated by the photodetector signal a preamplifier drives a compensation current through a loop surrounding the dumbbell to turn back the dumbbell into the rest position by effect of a magnetic field So the current compensating the torque affecting the dumbbell is a direct measure for the oxygen concentration within the sample gas.
In addition to measuring cell, permanent magnet, electronics and enclosure the paramagnetic oxygen detector contains a temperature sensor and a heating element to hold the detector at approx. 55 °C.
Several variations are available including corrosion resistant, solvent resistant and/or intrinsically safe (for measuring flammable gases) versions.

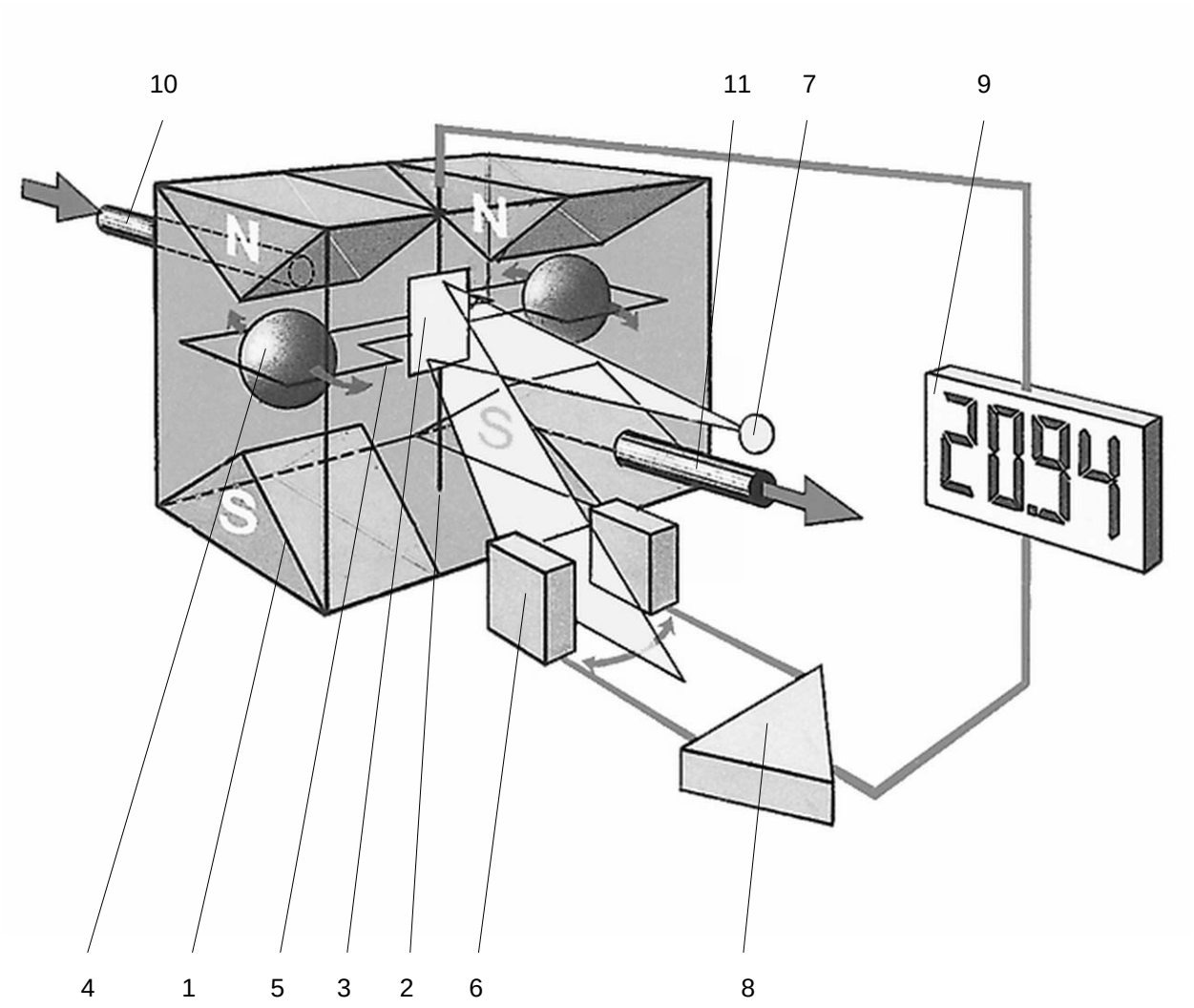

Fig. 2-4: Principle Construction of paramagnetic Analysis Cell

1	Permanentmagnet
2	Platinum wire
3	Mirror
4	Glass ball
5	Loop
6	Photodetector
7	Light source
8	Preamplifier
9	Display
10	Gas inlet
11	Gas outlet

Solvent-resistant Paramagnetic Oxygen Cell
Solvents being tested: up to 20%

Name	Name	Name	Name	Name
Acetone	Propane	Methanol	Carbon dioxide	Toluene
Acrolein	n-Butane	Ethylene	Dimethyl sulfide	Benzene
Argon	Pentane	Ethylene oxide	Dimethyl ether	Vinyl acetate
Aromatics	Hexane	Acetylene	Hydrogen	Vinyl acetylene
Butadiene	Heptane	Butene	Propadiene	Xylene
Butadiene-1	Methyl bromide	i Butyr acid	Cyclohexane	Methyl ethyl ketone
Butadiene-2	Iso propanol	i-Butyr aldehyde	Cyclohexanone	Methyl acetate
Methane	Acetic acid	i-Propyl formiat	Propylene	Methyl kaptane
Ethane	Ethanol	Formaldehyde	Propylene oxide	

Conditions:
The maximum concentrations need not to exceed 20% as single or sum values!
Assumption: a sample gas cooler lowers the dew point to approx. 5 °C.
A solvent resistant measuring cell is a consumable part!

Chlorine-resistant Paramagnetic Oxygen Cell
Components being tested:

Name
Chlorine (dry) **up to 99%**
Dichloroethyle **up to 20%**

Table 2-1: Solvent Resistant Sensor: Approved solvents

Medium affected Materials within Paramagnetic Oxygen Sensor			
Measuring cell type	**Standard**	**Solvent resistant**	**Corrosion resistant (Chlorine, dry)**
Case	SS 1.4571	SS 1.4572	SS 1.4573
Pole nucleus	Tantalum		
Mirror	Glass		
	Rhodium		
Tension band	Platinum		
	alloy		
Loop wire	Platinum		
	alloy		
Supporting wire	Platinum		
	alloy		
Cylinder	Glass		
Cylinder bushing	Ceramics		
Dumbbell	Glass		
Taring	PP	**Epoxy**	**Epoxy**
Compound material	Plumb bob, Epoxy	Plumb bob, Epoxy	**Epoxy**
Seals	FPM	**Kalrez**	**Kalrez**

Table 2-2: Medium affected Materials within Paramagnetic Oxygen Sensor

Special Hints on Paramagnetical Oxygen Sensors

The table below shows how accompanying gases interfere the paramagnetic oxygen measurement.
If the concentration of such gases is already given at time of enquiry this interference may be taken into account during factory startup and thus minimized (option).

Cross Inferences for Paramagnetic Oxygen Measurement		
100 % Gas		**Zero-level effect % O_2**
Nitrogen	N_2	+0.00
Carbon Dioxide	CO_2	-0.27
Hydrogen	H_2	+0.24
Argon	Ar	-0.22
Neon	Ne	+0.13
Helium	He	+0.3
Carbon Monoxide	CO	+0.01
Methane	CH_4	-0.2
Ethane	C_2H_6	-0.46
Ethene	C_2H_4	-0.26
Propane	C_3H_8	-0.86
Propene	C_3H_6	-0.55
Nitrogen Oxide	NO	+43.0
Nitrogen Dioxide	NO_2	+28.0
Nitrous Oxide	N_2O	-0.2

Table 2-3: Paramagnetic Oxygen Measurement, cross interference by accompanying gases

2.3.2 Electrochemical Measurement (EO_2)

This sensor uses the principle of galvanic cells, fig. 2-5 shows the design.

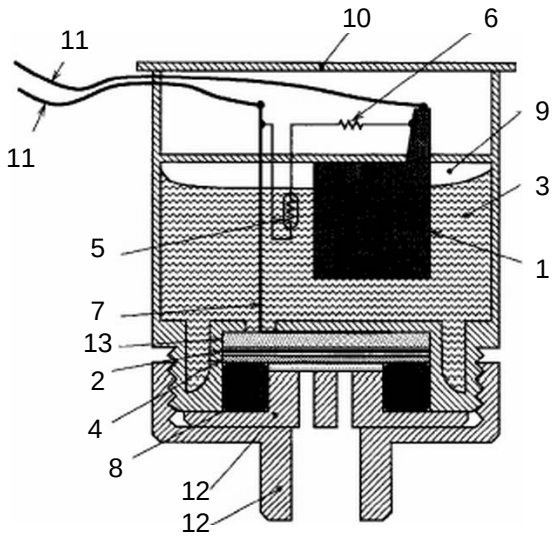

Fig. 2-5: Structure of electrochemical Oxygen Sensor

The electrochemical oxygen sensor‘s key components are a lead anode (1) and a gold cathode (2) surrounded by a special acid electrolyte (3).
The gold electrode is integrated solid with the membrane,which is a non-porous fluororesin membrane. Oxygen which barely diffuses through the membrane is electrochemically reduced on the gold electrode.
The temperature compensating thermistor and adjusting resistance are connected between the cathode and anode. The current generated by oxygen reduction is converted into a voltage by these resistances.
The value of the current flowing to the thermistor and resistance varies in proportion to the oxygen concentration of the measuring gases which contact the membrane. Therefore, the voltage at the terminal of the resistances is used for the sensor output to measure the oxygen concentration.

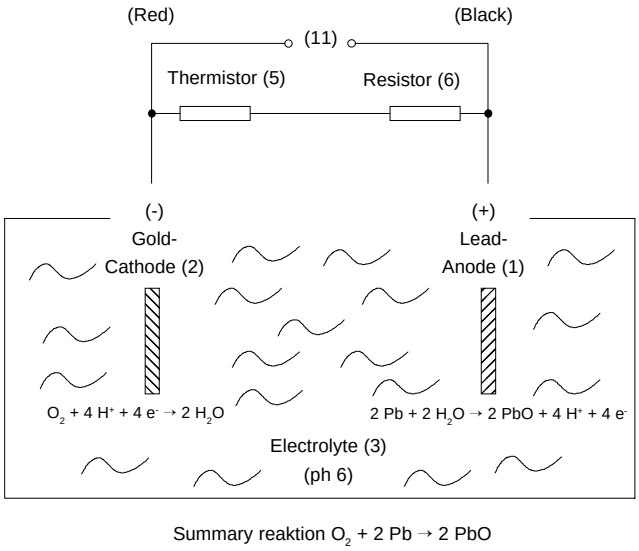

Fig. 2-6: Reaction of galvanic cell

In consequence of it's design the sensor's lifetime is limited and depends on theoretical designed life and oxygen concentration. The sensor output can be taken as a rough criterion for end of lifetime: The sensor is weared when the output in atmosphere is below 70 % of the initial output. The period till this can be calculated by

$$\textit{Lifetime} = \frac{\textit{designed life (hours)}}{O_2 \textit{ concentration (\%)}}$$

The sensor's designed life under constant conditions of 20 °C is approx. **900,000 hrs.**
The lifetime at 21 % oxygen is then calculated to approx. **42,857 hrs, corresponding to approx. 5 years.**

The given values are for reference only! The expected lifetime is greatly affected by the temperature of the environment in which the sensor is used or stored. Increases or decreases in atmospheric pressure have the same effect as that by increases or decreases in oxygen concentration (Operation at 40 °C halves lifetime).

Notes for analyzers with electrochemical EO_2 cell!
This sensor is not suitable for anorganic gases containing chlorene or flourene!
In addition is not suitable for sample gases containing ozone, H_2S (> 100 ppm) or NH_3 (> 20 ppm).
Due to the measuring principle the electrochemical oxygen cell requires a minimum internal consumption of oxygen (residual humidity avoids drying of the cell). Supplying cells continuously with dry sample gas of low grade oxygen concentration or with sample gas free of oxygen could result in a reversible detuning of O_2 sensitivity. The output signal will become instable, but response time remains constant.
For correct measurement the cell needs continuously to be supplied with concentrations of at least 0.1 Vol.-% O_2. We recommend to use the cells if need be in alternating mode, means to purge cells with conditioned (not dried, but dust removed) ambient air when measurement pauses.
If it is necessary to interrupt oxygen supply for several hours or days, the cell has to regenerate (supply cell for about one day with ambient air). Temporary flushing with nitrogen (N_2) for less than 1 h (e.g. for analyzer zeroing purpose) has no influence on measuring characteristics.

2.3.3 Trace Electrochemical Measurement (TEO_2)

The MLT uses an electrochemical sensor technology to achieve the trace measurement of oxygen. The principle structure of the oxygen sensor is shown in Fig. 2-7.
The sensor is a self contained disposable unit which requires no maintenance. The sensor utilizes the principle of electrochemical reaction to generate a signal proportional to the oxygen concentration in the sample.

The sensor consists of a cathode and anode which are in contact via a suitable electrolyte. The sensor has a gas permeable membrane which covers the cathode allowing gas to pass into the sensor while preventing liquid electrolyte from leaking out.
As the sample diffuses into the sensor, any oxygen present will dissolve in the electrolyte solution and migrate to the surface of the cathode. The oxygen is reduced at the cathode. Simultaneously, an oxidation reaction is occurring at the anode generating four electrons. These electrons flow to the cathode to reduce the oxygen.

The representative half cell reactions are:

Cathode:
$4e^- + 2H_2O + O_2 \rightarrow 4OH^-$

Anode:
$4OH^- + 2Pb \rightarrow 2PbO + 2H_2O + 4e^-$

The resultant overall cell reaction is:

$$2Pb + O_2 \rightarrow 2PbO$$

This flow of electrons constitutes an electric current which is directly proportional to the concentration of oxygen present in the sample. In the absence of oxygen, no oxidation / reduction reaction occurs and therefore no current is generated. This allows the sensor to have an absolute zero.

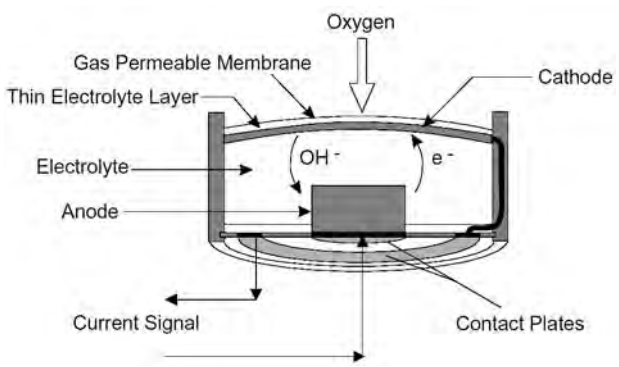

Fig. 2-7: Structure of electrochemical Trace Oxygen Sensor

Notes for analyzers with electrochemical TEO_2 cell!
For TEO_2 sensor please note that the gas inlet and outlet connections of the analyzer are sealed to prevent exposure of the sensor to air.
Prolonged exposure of the sensor to air can cause extended start up time, reduction of performance or damage to the sensor. Do not remove the sealing caps until all associated sample handling components are installed and the instrument is fully ready for installation.

After replacement purge gas paths with inert gas (nitrogen (N_2)) or sample gas as soon as possible to avoid prolonged exposure of the sensor to high concentrations of oxygen.
The longer the sensor is exposed to air, the longer it will take for the sensor to recover to low ppm levels. When installing a new sensor or starting the instrument for the first time, it may take as long as eight hours for the analyzer to purge down to the lowest operating range.
Prolonged exposure of the sensor to air can cause extended start up time, reduction of performance or damage to the sensor.

After initial startup or startup following a prolonged shutdown, the analyzer may require extended time to recover to the range of measurement. Commonly, this is caused by the introduction of ambient air into the sample and/or vent lines to the sensor. The presence of higher than normal levels of oxygen at the sensor will cause the sensor electrolyte to become saturated with dissolved oxygen. When the instrument is placed in operation, the sensor must now consume all excess dissolved oxygen above the desired measuring level.

All analyzers with electrochemical TEO_2 cell have to be purged with inert gas (Nitrogen, N_2) prior to disconnect the gas lines ! Then the gas line fittings have to be closed for transport or depositing analyzer.

2.4 Thermal Conductivity

To measure gases like Hydrogen (H_2), Argon (Ar) or Helium (He), the measurement method of thermal conductivity (TC) will be used.

2.4.1 Sensor Design

A complete in glass encapulated temperature resistor is the basis of the measuring.
Four of this resisitors are arranged in a Wheatstone Bridge which is mounted into a block. The block itself is thermostatted to supress influence of external temperature change.

2.4.2 Analysis Cell

Both the cell volume and the mass of its measurement resistor have been minimized in order to obtain short response time.
The block contains two gas paths for sample and reference gas. Always two sensors are located in the sample and the reference gas path.
Depending on application the reference side either is closed gastight and optional filled with reference gas or it is opened and can be purged with reference gas (corresponding to the respective measuring application).
Materials in contact with sample gas are aluminum, Viton, glass and gold in the standard type.
Measuring cells stand for corrosive applications, block and tubing are of SiO_2 coated stainless steel or from Hastelloy according to the measuring application.

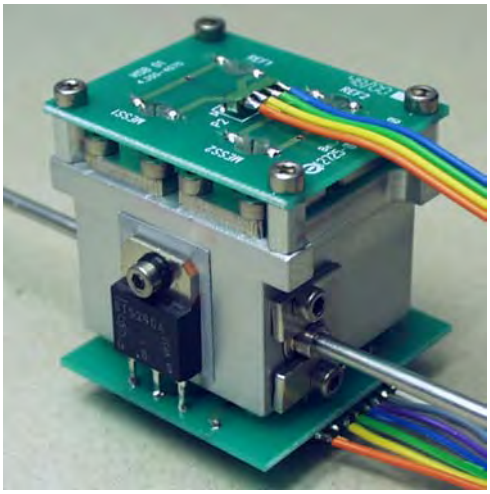

Fig. 2-8: Sensor block *(thermal conductivity detector TCD)*

2.4.3 Measurement Method

The entire measurement cell is thermostated to a temperature of up to 75 °C. The four integral temperature sensors are electrically heated to a higher temperature. Their temperatures, and thus their electrical resistance, are dependent upon heat losses, which, in turn, result from heat transport in the surrounding gas to colder chamber walls. For otherwise stable conditions, this heat transport will be proportional to the thermal conductivity of the gas present between the sensor and the chamber wall. Interconnecting the four sensors into Wheatstone bridge circuit (Fig. 2-9) provides an electronic signal proportional to gas density. Electronic circuitry processes this signal to obtain standardized signal amplitudes, and transmits these to both an indicator instrument and to the signal output connector.

The internal gas paths are constructed to get a minimimized response time at minimized dependence of the analytical signal upon sample gas flow rate.

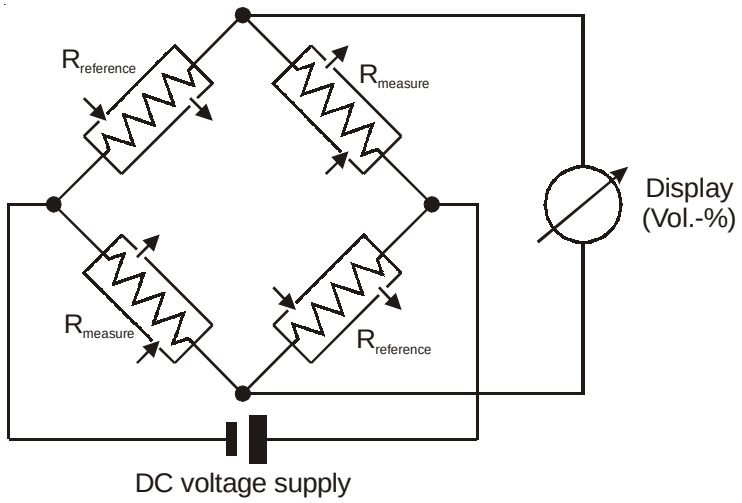

Fig. 2-9: Measuring principle Thermal Conductivity Sensor *(Wheatstone bridge)*

5. Installation

This chapter describes in detail how to install the different analyzer variations.

5.1 General

Carefully examine the shipping carton and contents for signs of damage. Immediately notify the shipping carrier if the carton or its contents are damaged. Retain the carton and packing material until the instrument is operational.

WARNING

ELECTRICAL SHOCK HAZARD!

Prior to connecting the analyzer to mains ensure all safety instructions as given in the appropriate chapter at the beginning of this manual and in the following analyzer refered sections are read and unterstood!

WARNING

EXPLOSION HAZARD !

Do not operate nor install these instruments in hazardous areas without additional measures!

Installation area has to be clean, free from moisture, excessive vibration and frost-protected. Take care to meet the permissible ambient temperatures as given in the technical data section!

Instruments must not be exposed to direct sunlight, fluorescent lamps nor sources of heat.

For suppressed ranges of MLT 3 for gas purity measurment we recommend installation between 20 °C and 30 °C (68 to 86 °F).

For outdoor installation it is recommended to mount the instruments into a cabinet. At least sheltering against rain is required.

Do not cover venting openings and take care to mount the instrument in a distance to walls not affecting venting.

To stay in compliance with regulations regarding electromagnetic compatibility it is recommended to use only shielded cables, as optionally available from Emerson Process Management or equivalent. Customer has to take care that the shield is connected in proper way. Shield and signal connector enclosure need to be conductively connected, submin-d-plugs and sockets must be screwed on the analyzer.

Using external submin-d-to-terminal adaptor elements (option) affects electromagnetic compatibility. In this case the customer has to take measures to stay in compliance and has to declare conformity, when required by legislation (e.g. European EMC Directive).

CAUTION

The mains socket has to be nearby the power supply unit and easily accessible! Disconnecting from mains requires unplugging the power plug!

To comply with the CE mark requirements, analzyers requiring DC power supply must be supplied by a power supply unit of type UPS 01 T, DP 157, SL5, SL10 (DP 157 rack installation only) or equivalent units. Equivalent units must provide SELV output voltages!

Verify proper polarity when connecting DC 24 V operated analyzers !

5.1.1 Transfer Safety Lock of MLT 1/ULCO or MLT 2

CAUTION

TRANSFER SAFETY LOCK !

First of all operations unscrew transfer safety lock of MLT 1/ULCO or MLT 2 !

MLT 1/ULCO: Unscrew both knurled-head screws on bottom side of the housing (Fig. 5-1a) ! For protection against loss screw the knurled-head screws into the respective holders at housing rear side (Fig. 5-1b) !

MLT 2: Unscrew transfer safety lock of photometer sliding carriage (Fig. 5-1c)!

For transport of MLT the transfer safety lock absolutely have to be locked !

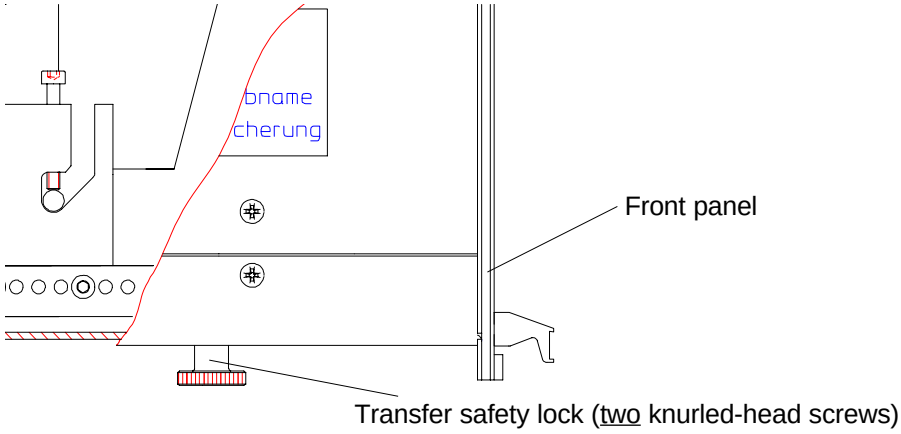

Fig. 5-1a: Transfer safety lock MLT-ULCO
(housing side view, detail sketch)

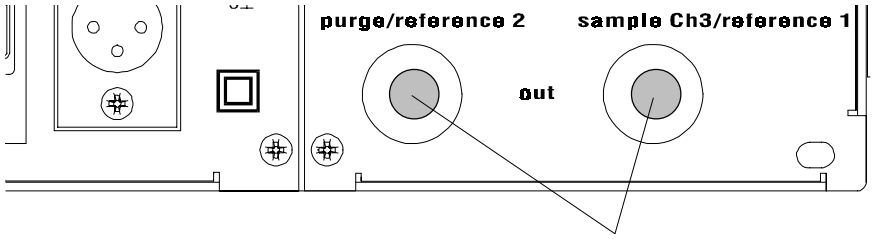

Fig. 5-1b: MLT 1, Rear panel (holder for safety lock)

Fig. 5-1c: MLT 2, Photometer safety lock

5.2 Gas Conditioning (Sample Handling)

To ensure trouble-free analyzer operation one has to attach great importance to gas conditioning:

All gases must be conditioned before supplying!
When supplying corrosive gases ensure that gas path components are not affected!!

Flammable gases must not supplied without additional protective measures!
It is prohibited to supply explosive gases!

Furthermore the gases must be

- ❏ dry
- ❏ free of dust
- ❏ free of aggressive components affecting gas path materials (e.g. by corrosion).

If moisture can not be avoided take care that the gas‘ dew point is at least 10 °C below ambient temperature to avoid condensation within the gas path.
Pressure and flow have to be within the limits given in the technical data section.
For suppressed ranges a constant pressure (+- 1 psig at 20 - 25 psig) and constant temperature (20 - 30 °C, 68 - 86 °F) are very important.

Suitable gas conditionning hardware may be supplied or recommended for specific analytical problems and operating conditions.

5.2.1 Fine Dust Filter (Option MLT 3)

MLT 3 can have two built-in fine dust filters (filter material PTFE, pore-size approx. 2 µm) optional.

5.2.2 Gas Sampling Pump (Option MLT 3)

Optional MLT 3 can be equipped with a gas sampling pump (pumping rate max. 2.5 l/min.).

Note!

For mobile application of MLT only !
Lifetime max. 5,000 running hours !

5.2.3 Pressure Sensor (Option)

It is possible to integrate a pressure sensor with a range of 800 - 1100 hPa.
The concentration values computed by the analyzer will then be corrected to reflect the barometric pressure to eliminate faulty measurements due to changes in barometric pressure (see technical data).

5.2.4 Gas Flow

The gas flow rate should be within the range 0.2 l/min to maxi. 1.5 l/min !

A constant flow rate of about 1 l/min is recommended.

The gas flow rate for MLT with paramagnetic oxygen sensor (PO_2), trace electrochemical oxygen sensor (TEO_2) and for MLT 2 analyzers used in hazardous area (Ex zones) is allowed to <u>max. 1.0 l/min</u> !

It is possible to integrate a flow sensor with a range 0 - 2 l/min (0.2 l/min to maxi. 1.5 l/min recommended) ! In this case gas flow can be shown via operation front panel.
For MLT 3 flow control can be done with a screw driver via a optional integrated throttle into the optional built-in dust filter.

5.3 Gas Connections

WARNING

TOXIC GAS HAZARDS!

Take care that all external gas lines are connected as described and are tight to avoid leaks!

Improperly connected gas lines may cause explosion or death!

Exhaust may contain hydrocarbon and other toxic components (e.g. carbon monoxide)! Carbon monoxide is highly toxic and can cause headache, nausea, loss of consciousness, and death. Avoid inhalation of exhaust!

CAUTION

Do not interchange gas inlet and outlet! All gases must be conditioned before supplying! When supplying corrosive gases ensure that gas path components are not affected!

Max. permissible gas pressure: 1,500 hPa, except instruments for gas purity measurement (see chapter 5.4.3.1), with integrated valve blocks (see page 5-8) and/or paramagnetic Oxygen sensor (see table page 20-4)!

Exhaust lines must be installed in a descending way, need to be pressureless,frost-protected and in compliance with applicable legislative requirements!

WARNING

Take care of the safety instructions applicable for the gases (sample gases and test gases) and for the gas bottles containing these gases!

Flammable gases must not supplied without additional protective measures!

It is prohibited to supply explosive gases!

The number of gas fittings as well as their assignment vary depending on analyzer model and selected options.
All gas fittings are labeled and are normally located at the analyzers rear panel, in case of MLT 2 and CAT 100 they are located at the bottom side.
When it is necessary to open gas paths seal the analyzer‘s gas fittings by using PVC caps to avoid pollution of the internal gas path by moisture, dust, etc.

The analyzer should be mounted near the sample source to minimize sample transport time. A sample pump may be used to descrease response time, whereat the analyzer is either operated in bypass mode or protected by an overpressure valve against too high flow and pressure (see fig. 5-2).

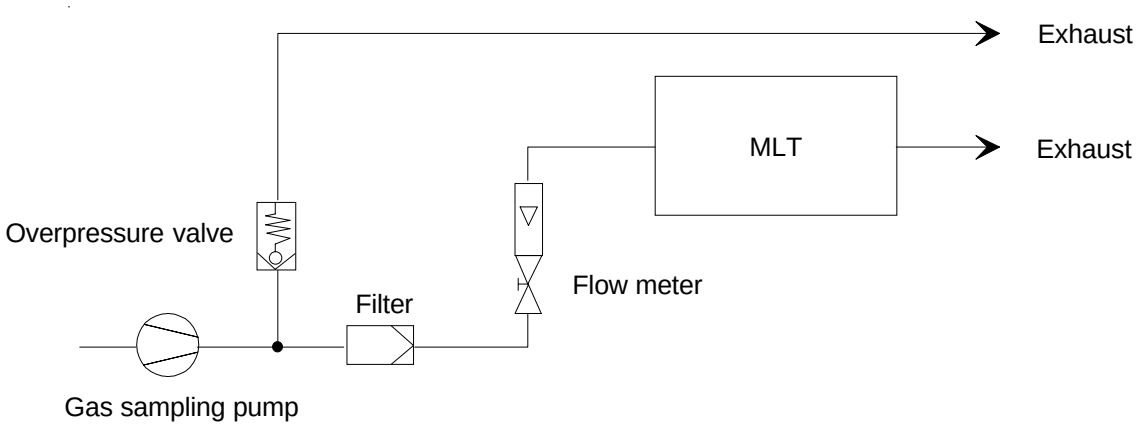

Fig. 5-2: MLT, Bypass installation

5.3.1 Internal Solenoid Valve Block (Option for MLT 1/CAT 200)

For operation with optional solenoid valves, the following indications have to be considered: Operation with solenoid valves is not possible for 2 - channel analyzer with parallel gas paths. Supply overpressure for all gases is limited to 50 to 500 hPa when an analyzer is equipped with an internal solenoid valve block. .

5.3.2 Purge Gas Connections

The analyzers may optionally provide a gas fitting for purging the enclosure (e.g. with nitrogen) when measuring

- low CO_2 concentrations:
  N_2 minimizes interference by ambient air
- flammable gases:
  N_2 gives additional safety in the event of leakage inside the instrument
- aggressive components:
  purging with air gives additional safety in the event of leakage inside the instrument.

Purge medium must be dry, clean and free of corrosive and solvent components!

Purging can be accomplished with any inert gas including "instrument quality" air, nitrogen, or argon which contains no more than trace amounts of a combustible vapor. Compressed air is the most common and practical purging medium. Bottled nitrogen is uitilized most frequently in isolated places where no compressed air source is available. Personal protection has to be taken into consideration in case of N_2 purge in closed rooms, e.g. containers.

CAUTION

Purge gas must be conditioned:

Take care for purge gas temperature: Purge gas should have the same temperature as ambient temperature of the analyzer but NOT below 20 °C and above 35 °C! Otherwise it must be cooled or warmed up before let in into the instrument! Purge gas should be instrumental / synthetic air (free of oil, no corrosive, toxic or flammable gas componets) or nitrogen depending on application.

5.4 Analyzer Specific Instructions

5.4.1 MLT 1

5.4.1.1 MLT 1, platform mounting only

MLT 1 analyzer module housing is available for platform mounting (built-in into a NGA platform) only (type M).
These analyzers need DC 24 V power supply and netwotk connection utilizing platform. Built-in the modul into platform housing correctly (see platform manual).
Switching On the module will be done via Switching On the platform.

Output signals and data are accessible at the rear panel via submin-d connectors. Depending on analzyer variation not all signals are available. For information about pin-assignments see section 21.

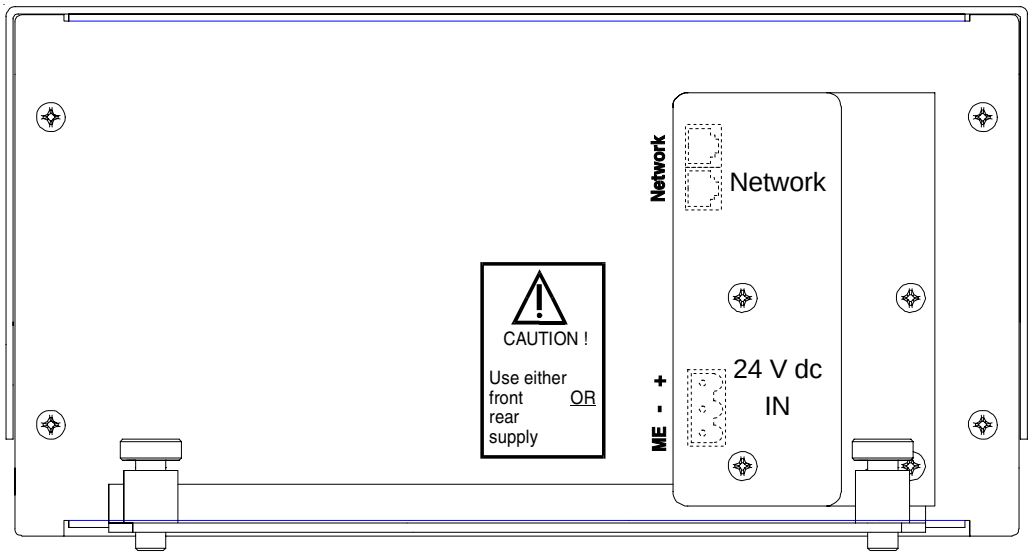

Fig. 5-3: MLT 1 analysis module (platform mounting), front panel, front view

5.4.1.2 MLT 1, external installation and 1/2-19" Housing

MLT 1 analyzer module housing is available for platform mounting (built-in into a NGA platform) or for external installation (type A).

The analyzer variation MLT 1 configured as tabletop analyzer (type T) provide a handle attached to a front panel frame. The instrument is intended for horizontal or slightly angular (utilizing the handle as support) orientation during operation.
Without front panel frame and handle the analyzers may be mounted into a rack (rack mount version, type R). Four screws located at the front panel are used to fix the analyzer in the rack.

These analyzers need DC 24 V power supply utilizing an external power supply unit. They provide a three pole power input connector located at the rear panel.

It is recommended to use original Emerson Process Management power supply units and supply cords. If a supplement is used take care of correct pin assignment, as given on the analyzer´s rear panel!

The analyzers do not provide a power switch and are operable when connected to power.

For analyzer module (A) [external installation or platform mounting] it is not allowed to supply the module from front and rear simultaneously !

For external installation connections on frontside absolutely have to closed with the blind plate delivered from our factory to be in agreement with the CE conformity.!

Output signals and data are accessible at the rear panel via submin-d connectors. Depending on analzyer variation not all signals are available. For information about pin-assignments see section 21.

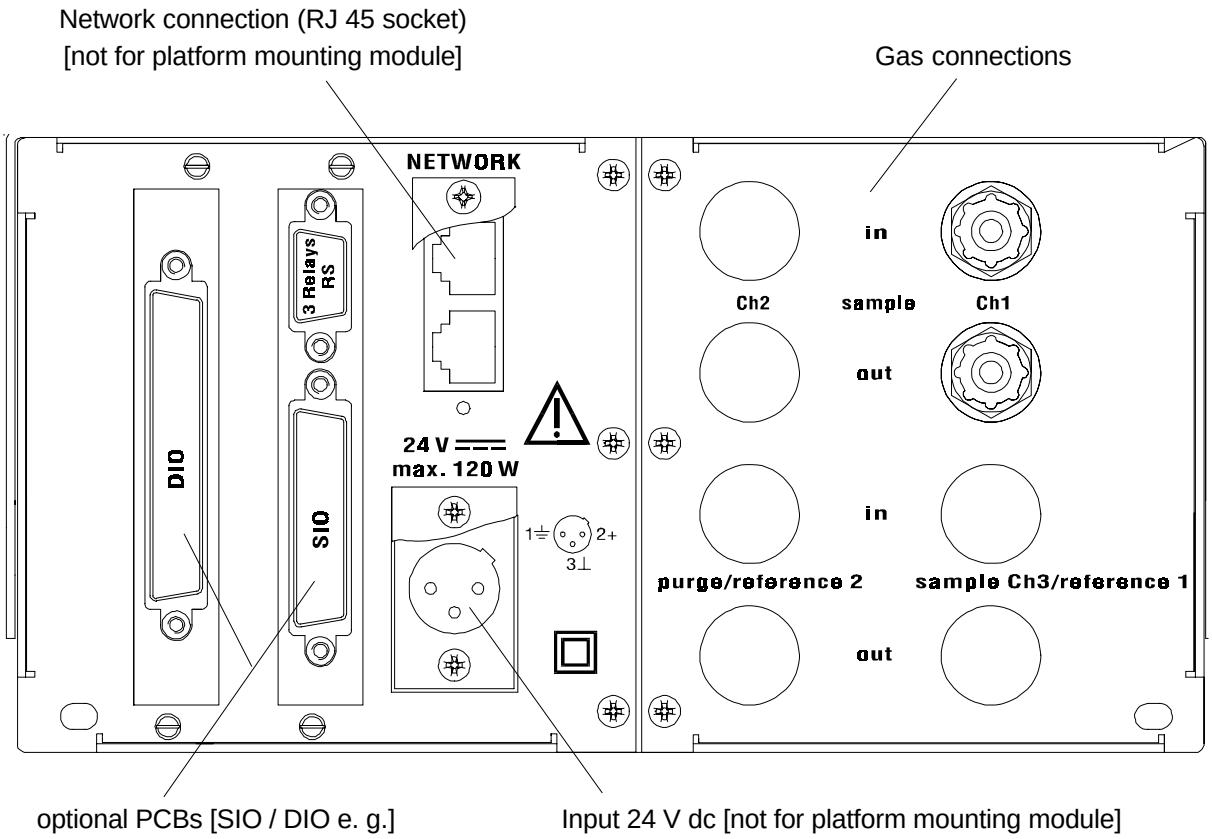

Fig. 5-4: MLT 1, standard gas connections

Depending on analyzer version the following gas connections are installed:

in = Gas inlet	out = Gas outlet
Channel 1 = measuring channel 1	Channel 2 = measuring channel 2
Channel 3 = measuring channel 3	reference = Reference gas (Differential measurement)
	purge = purge gas (housing)

Note!

Purge and reference option combination is only available with two channel analyzer.

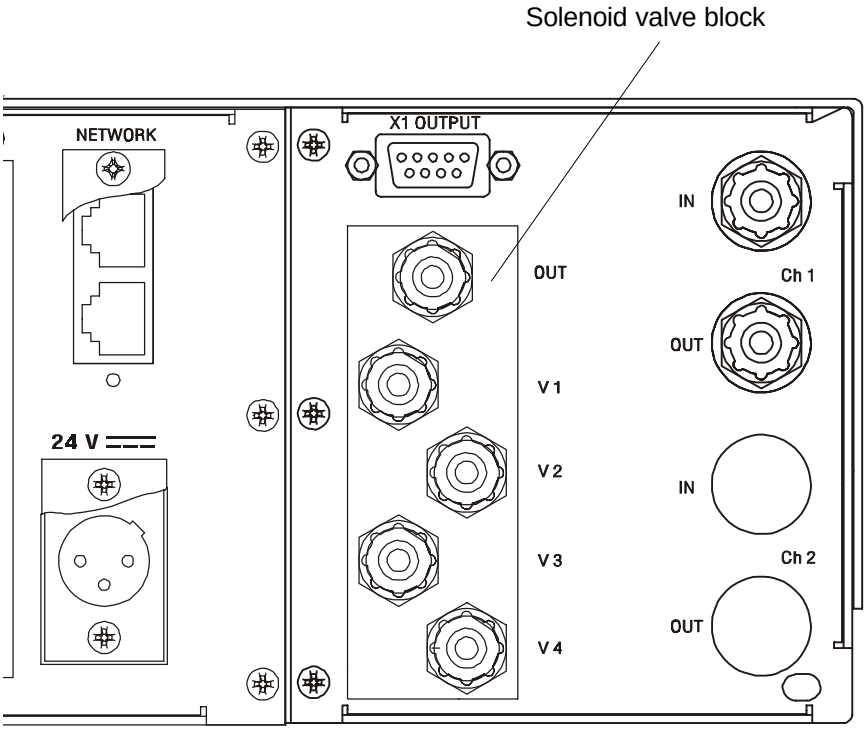

Fig. 5-5: MLT 1, gas connections with solenoid valve option

V 1 = Span gas 1
V 2 = Span gas 2
V 3 = Sample gas
V 4 = Zero gas
out = Gas outlet (to IN CH1)*

IN CH1 = Gas input (from OUT of soelnoid valve block)*
OUT CH1 = Gas exhaust

* Standard.
Option: Valve block output may be sued for external sample handling system (special configuration)

5.4.2 MLT 2 (Field Housing)

The MLT 2 variation is designed for wall mounting and is available in two different versions: One version, equipped with standard front panel is intended to be installed at protected locations whereas the version with impact tested magnetically operated front panel may be outdoor installed.
In any case the restrictions for ambient temperatures have to be taken into account, see section technical data!

This current instruction manual covers using the MLT 2 analyzer for general purpose applications only!

Installation, startup and maintenance for operation in hazardous areas are described in detail in a separate instruction manual, shipped together with each such analyzer and are not subject of the current instruction manual!

5.4.2.1 Wall Mounting

This housing is designed for wall mounting.
Utilizing the four mounting brackets at the analyzer‘s rear side the instrument can be wall mounted.
For fastening points see Fig. 5-6 please.

CAUTION

MLT 2 -- HEAVY INSTRUMENTS !

The analyzer variations MLT 2 intended to be wall mounted and/or outdoor installed weigh up to 35 kg, depending on included options!

Use two person and/or suitable tools for transportation and lifting these instruments!

Take care to use anchors and bolts specified to be used for the weight of the units!

Take care the wall or stand the unit is intended to be installed at is solid and stable to hold the units!

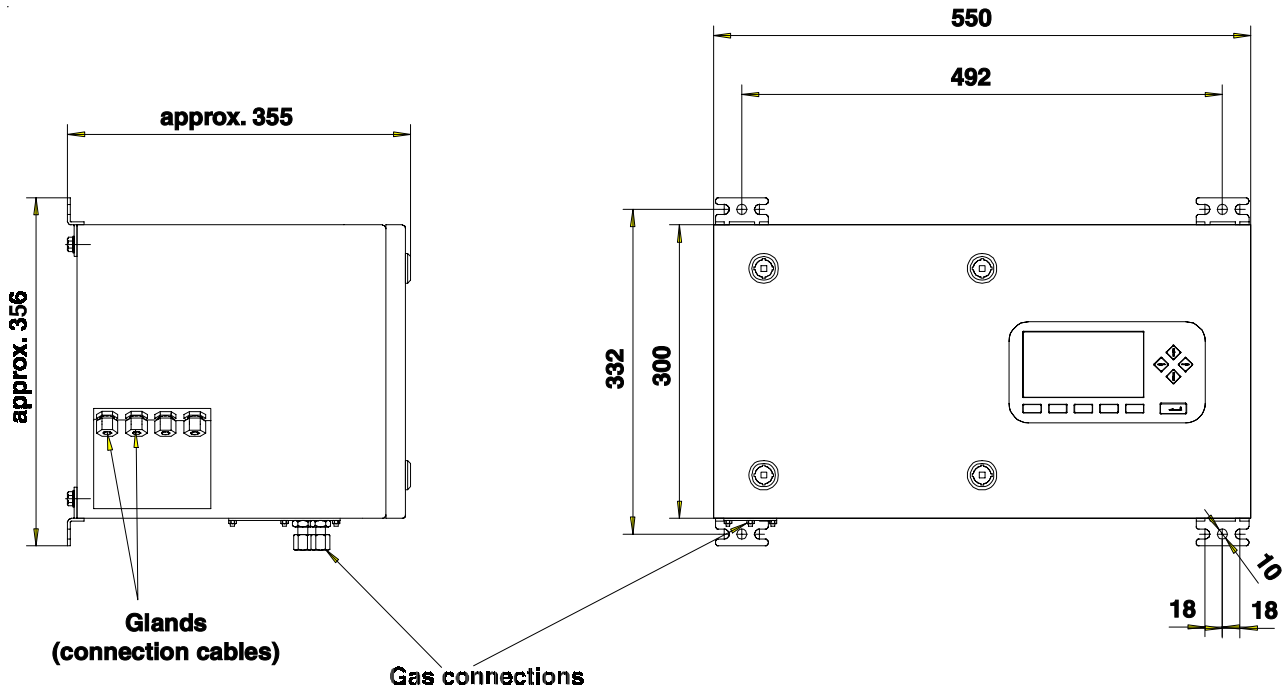

Fig. 5-6a: Dimensional sketch / Drill drawing MLT 2 Standard version *[all dimensions in mm]*

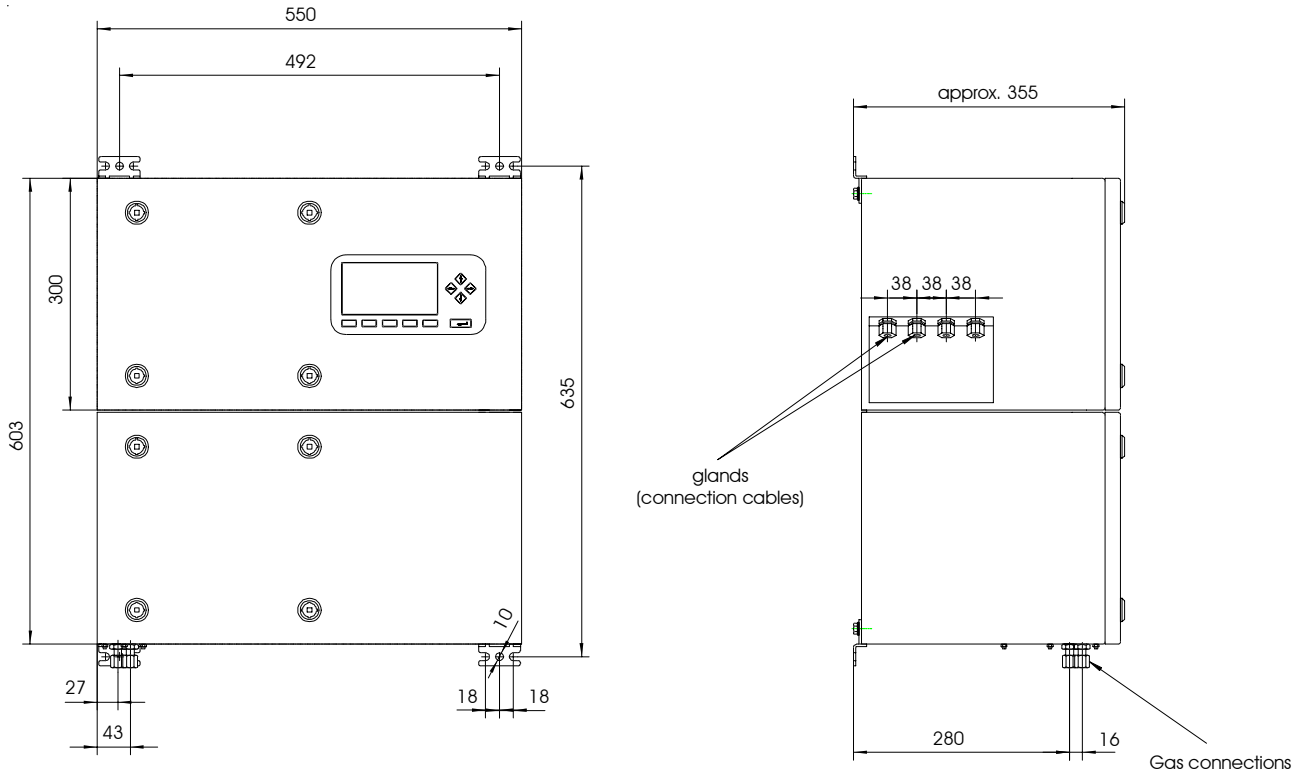

Fig. 5-6b: Dimensional sketch / Drill drawing MLT 2 Dual housing version *[all dimensions in mm]*

5.4.2.2 Electrical Connections

WARNING

ELECTRICAL SHOCK HAZARD!

Installation and connecting mains and signal cables are subject to qualified personnel only taking into account all applicable standards and legislative requirements!

Failure to follow may cause warranty invalidation, property damage and/or personal injury or death! Mains and signal cables need to be connected to internal srew terminals requiring to work at open housing near life parts!

Installation of this instrument is subject to qualified personnel only, familiar with the resulting potential risks!

MLT 2 gas analyzers do not provide a mains switch! A mains switch or circuit breaker has to be provided in the building installation. This switch has to be installed near by analyzer, must be easily operator accessible and has to be assigned as disconnector for the analyzer.

The analyzer provides a protective earth terminal. To prevent electrical shock hazards the instrument must be connected to a protective earth. Therefore the instrument has to be connected to mains by using a three wire mains cable with earth conductor!

Any interruption of the earth connector inside or outside the instrument or disconnecting the earth terminal may cause potential electrical shock hazzard!

The analyzer does not provide a mains switch and is operable when connected to power.

- ❏ Cables entering the analyzer housing should be kept as short as possible inside the enclosure.
- ❏ The cable glands are suitable to fix cables with outer diameters of 7 to 12 mm. Special adaptors are available for fixing other or multiple cables in one gland.
- ❏ Mains terminals are designed to connect wires up to a cross section of up to 2,5 mm².
- ❏ To ensure electromagnetic compatibility it is recommended to use shielded signal cables only!
  Take into account the installation instructions for cable glands (page 5-19)!

a) Mains Supply

The analyzer provides an integrated multi range power supply unit (either power supply of type SL5 or of type SL10) with voltage selector switch, to be set to the appropriate range to meet the nominal voltage (115 V / 230 V) at installation site. The switch is accessible through a safety barrier when the analyzer‘s front door is open.

❍ Opening of housing (front panel) (see section 15.2).

❍ Insert mains cord into the housing utilizing the cable gland marked in fig. 5-7.
Connect L and N to powerline filter (Fig. 5-9) via plug jacket (6,3x0,8 mm).
Connect PE via ring cable system to left ground conductor pin (Fig. 5-9).
Alternatively the mains line is connected via terminal strips (Fig. 5-9).

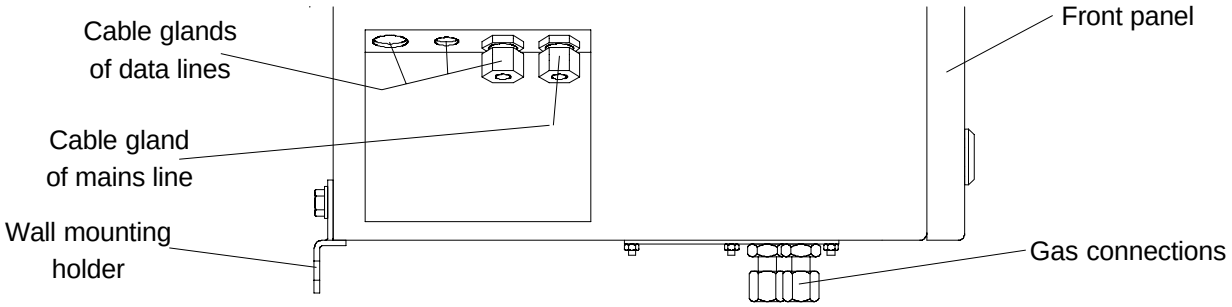

Fig. 5-7: MLT 2, PG fittings for lines *(side view from left)*

b) optional Data Lines

This are analog outputs, digital inputs/outputs and serial interfaces.
Signal and data lines have to be connected to adaptor elements located at the analyzer‘s inner left side.
These adaptors provide a submin-d connector (instrument side) and screw terminals (out going side) to connect external cables. Inside the analyzer signal distribution utilizes ribbon cable connections between adaptors and PCBs submin-d connectors. Adaptor terminals are one-to-one connected to the submin-d pin of same designation: Terminal 1 is connected to pin 1, terminal 2 to pin 2 etc. (section21).

Cables for external data processing must be double insulated for mains voltage when used inside the instrument!

If double insulation not possible signal cables inside the analyzer must be installed in a way that a distance of at least 5 mm is ensured permanently (e.g. by utilizing cable ties).

The number of installed adaptor elements variies depending on analyzer configuration.
For detailed pin designations see section 21.

❍ Opening of housing (front panel) (see section 15.2).

❍ Take lines via cable glands (Fig. 5-7) inside the housing.
Connection is to be done to the respective adaptor elements (Fig. 5-8 and 5-9).

All unused cable glands need to be sealed using a sealing plug (part no. ETC00791 or similiar, see Fig. 5-11).

Unused cable gland openings in the enclosure need to be covered using a special screw (part no. ETC 000790 or similiar, see Fig. 5-11).

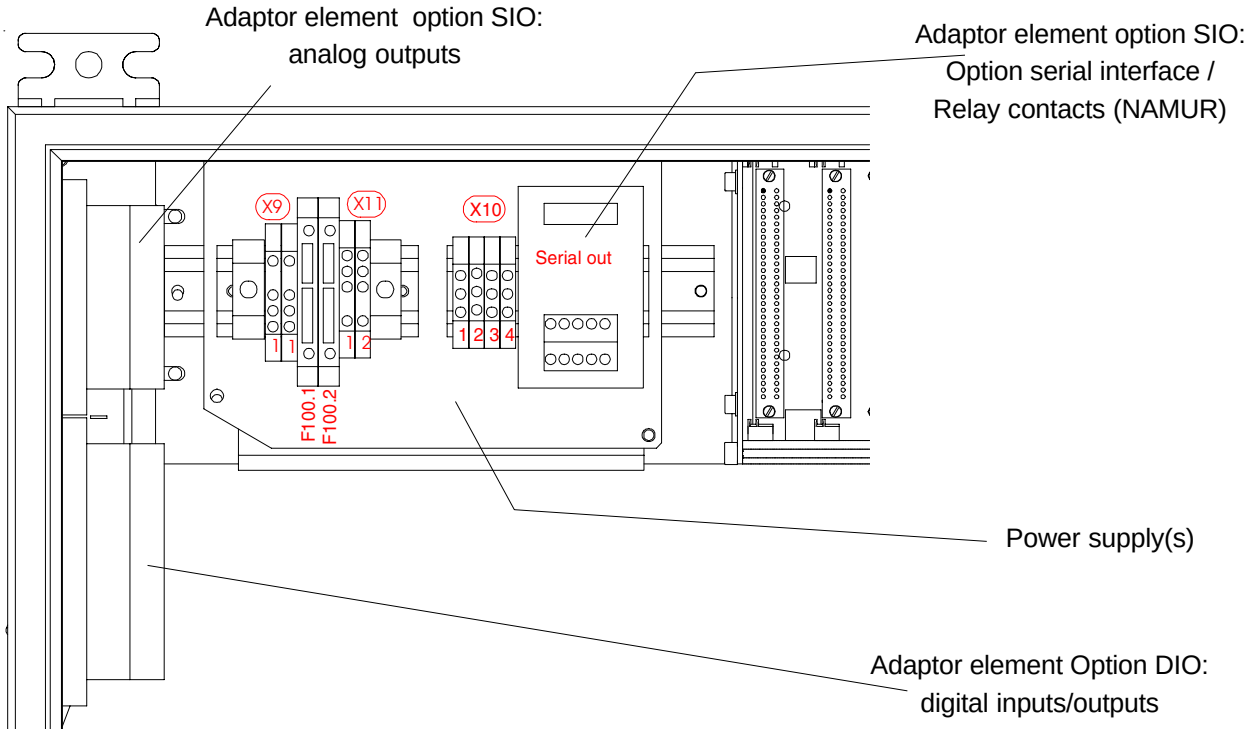

Fig. 5-8: MLT 2, Data line connections
Inside view from front (detail, without front door)

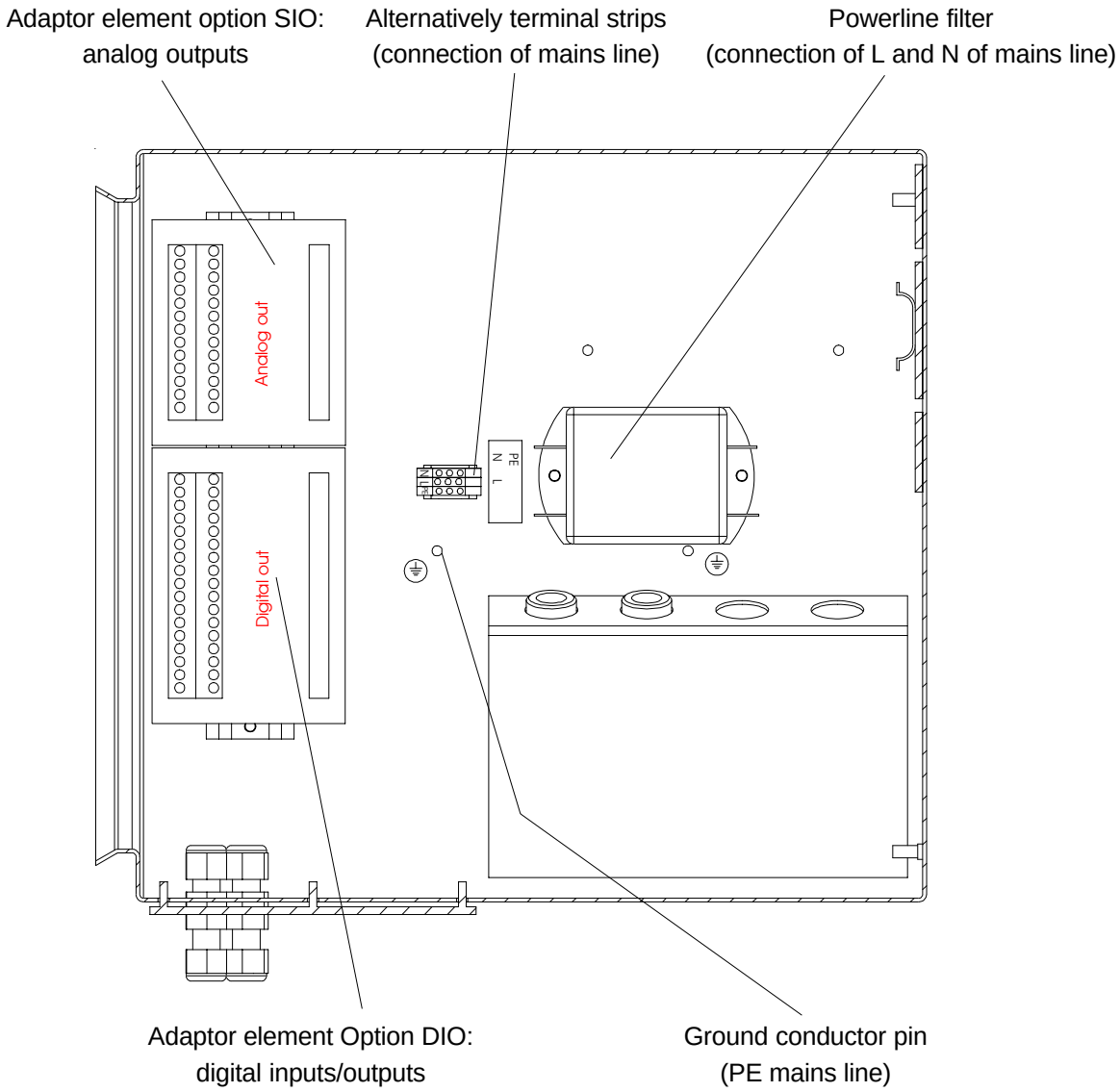

Fig. 5-9: MLT 2, Connection data lines / mains line
(inside view, left side panel)

c) Cable Gland Assembly Instruction for Shielded Cables

1. Strip the cable insulation.
2. Uncover the shielding

3. Feed cable through gland nut and into fixing element.
4. Put the shielding net over the element the way that it covers the o-ring 2 mm.

5. Stick the fixing element into the neck and fix the gland.

Fig. 5-10: Cable Gland Assembly Instruction for Shielded Cables

ETC00791
Cable gland sealing plug

ETC00790
Cable gland allen screw sealing plug

Fig. 5-11: Cable gland sealing plug / Cable gland allen screw sealing plug

d) Gas Connections

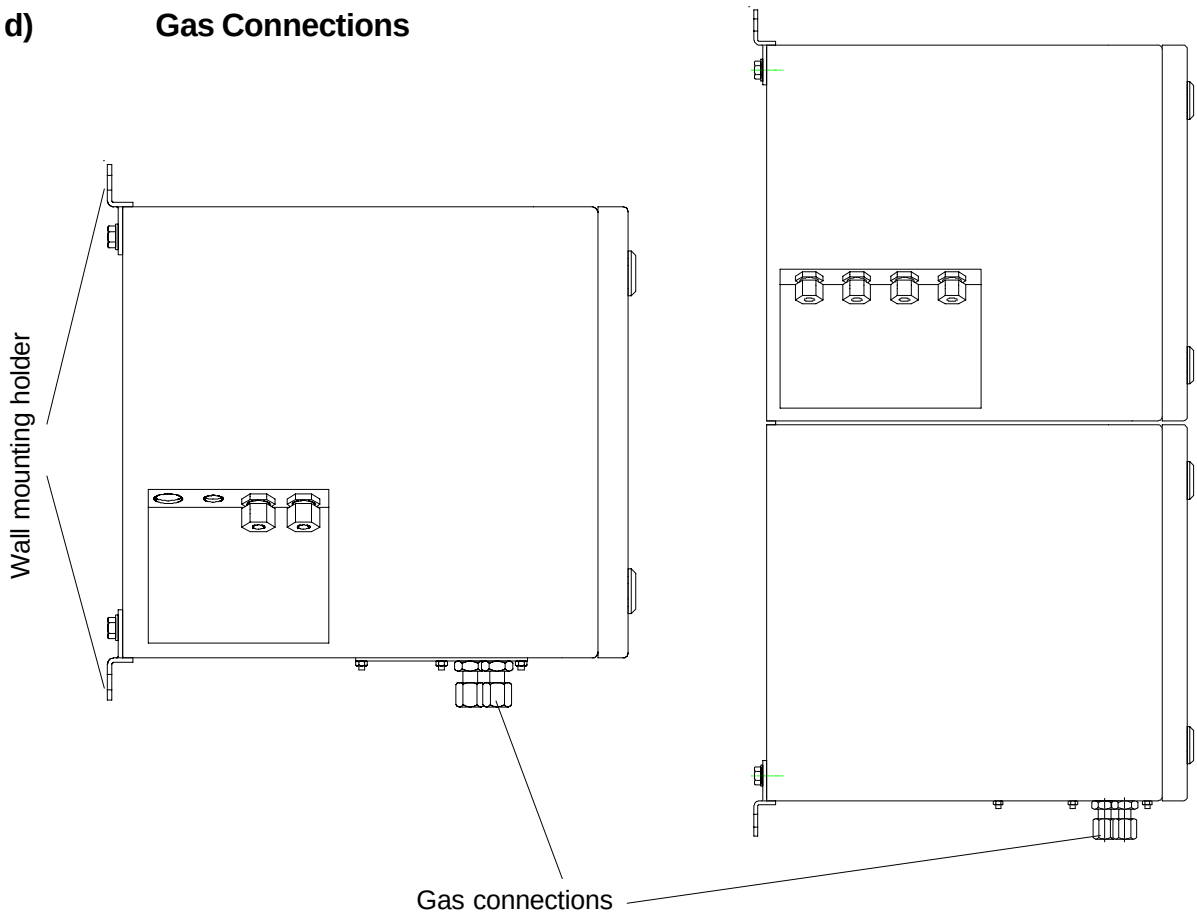

Fig. 5-12a: MLT 2, gas connections

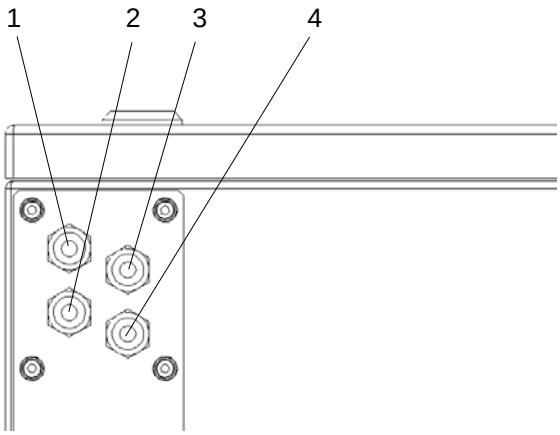

Fig. 5-12b: MLT 2, Gas fittings at analyzer's bottom side (other configurations possible, see labels at instrument)

1	Gas inlet channel 1
2	Gas inlet channel 2
3	Gas outlet channel 1
4	Gas outlet channel 2

5.4.3 MLT 3

All components of analyzers or analyzer modules are incorporated into a 1/1 19" housing. The housings are available as rack mounting (R) or as table-top (T) versions. For analyzer modules there is mounted a blind plate instead of an operation front panel.
The equipment has an internal power supply with “autoranging” for operating voltages of 230 V AC or 120 V AC resp., 47-63 Hz.

The analyzers do not provide a power switch and are operable when connected to power.

Output signals and data are accessible at the rear panel via submin-d connectors. Depending on analzyer variation not all signals are available. For information about pin-assignments see section 21.

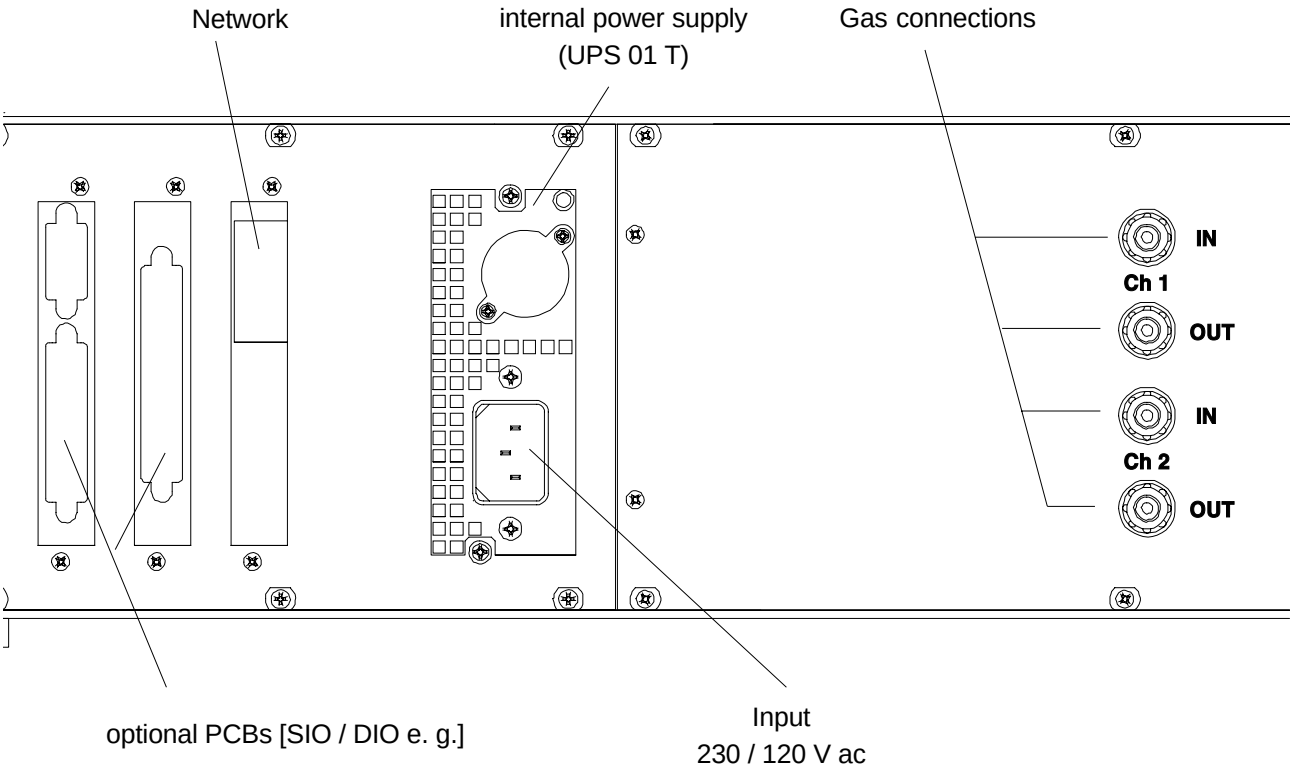

Fig. 5-13: MLT 3 (standard version), gas connections and voltage supply

IN = Gas inlet
OUT = Gas outlet (exhaust)
CH 1 = Channel 1
CH 2 = Channel 2

5.4.3.1 MLT 3 for gas purity measurement

The necessary gas connections are marked analyzer specific.
Different possibilities of internal layout and external tubing are shown in Fig. 1-24, depending on instrument specific features.

CAUTION

An constant input pressure (± 70 hPa or ±1 psig) between 1,500 to 3,000 hPa (20 to 43 psig) is necessary for sample gas as well as for zero gas and span gas because of internal pressure regulator.

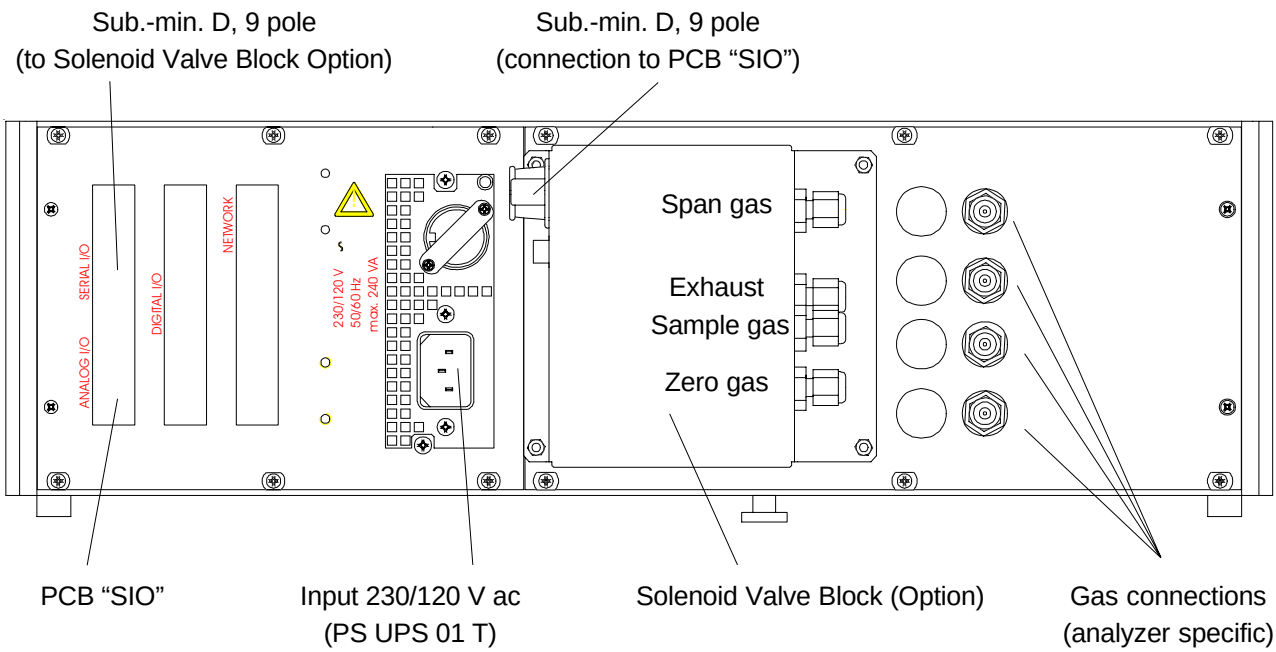

Fig. 5-14: MLT 3 (gas purity measurement), Rear view

a) Instrument with manual 4/2-way-valve

The connection of sample gas, zero gas and span gas will be done to the gas connections at the rear side of the instrument (Fig. 5-14). The gases will be lead internally via stainless steel tubes to the 4/2-way-valve (see Fig. 1-30c, too).

b) Instrument with solenoid valve block

The connection of sample gas, zero gas and span gas will be done to the solenoid valve block at the rear side of the instrument (Fig. 5-14 and 5-15). The common exhaust of solenoid valve block is be lead to the real sample gas inlet of the instrument via stainless steel tube (see Fig. 1-30a).

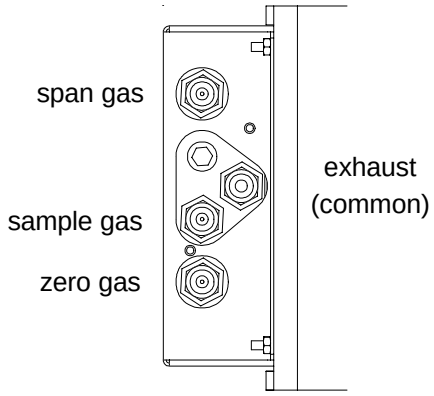

Fig. 5-15: Solenoid valve block MLT 3 (gas purity measurement) *(side view)*

c) Instrument with quick shutoff connector

The connection of sample gas will be done to the quick shutoff connector at the front side of the instrument (Fig. 5-16). The sample gas will be lead internally via stainless steel tube either to the 4/2-way-valve or to a gas outlet at the rear side of instrument and then to the sample gas inlet of the solenoid valve block (see Fig. 1-30b, too).
All other gas connections will be done as described in section 5.3 and 1.8.

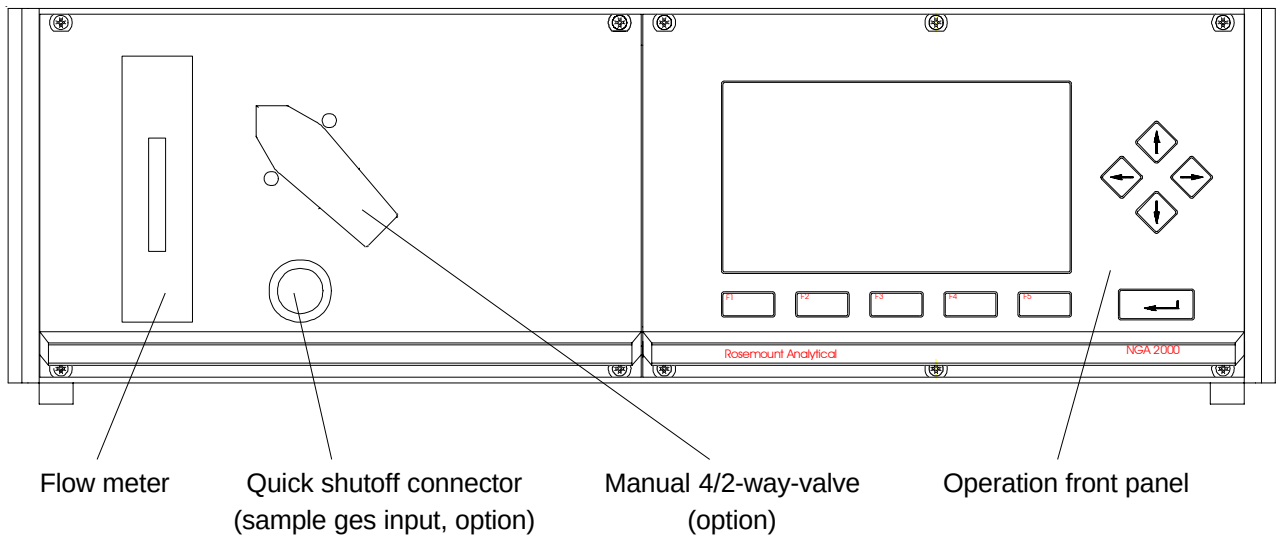

Fig. 5-16: MLT 3 (gas purity measurement), front view

5.4.4 MLT 4

All components of analyzers or analyzer modules are incorporated into a 1/1 19" housing. The housings are available as rack mounting (R) or as table-top (T) versions. For analyzer modules there is mounted a blind plate instead of an operation front panel.
These analyzers need DC 24 V power supply utilizing an external power supply unit. They provide a three pole power input connector located at the rear panel.

It is recommended to use original Emerson Process Management power supply units and supply cords. If a supplement is used take care of correct pin assignment, as given on the analyzer´s rear panel!

The analyzers do not provide a power switch and are operable when connected to power.

For analyzer module (A) [external installation or platform mounting] it is not allowed to supply the module from front and rear simultaneously !

For external installation connections on frontside absolutely have to closed with the blind plate delivered from our factory to be in agreement with the CE conformity.!

Output signals and data are accessible at the rear panel via submin-d connectors. Depending on analzyer variation not all signals are available. For information about pin-assignments see section 21.

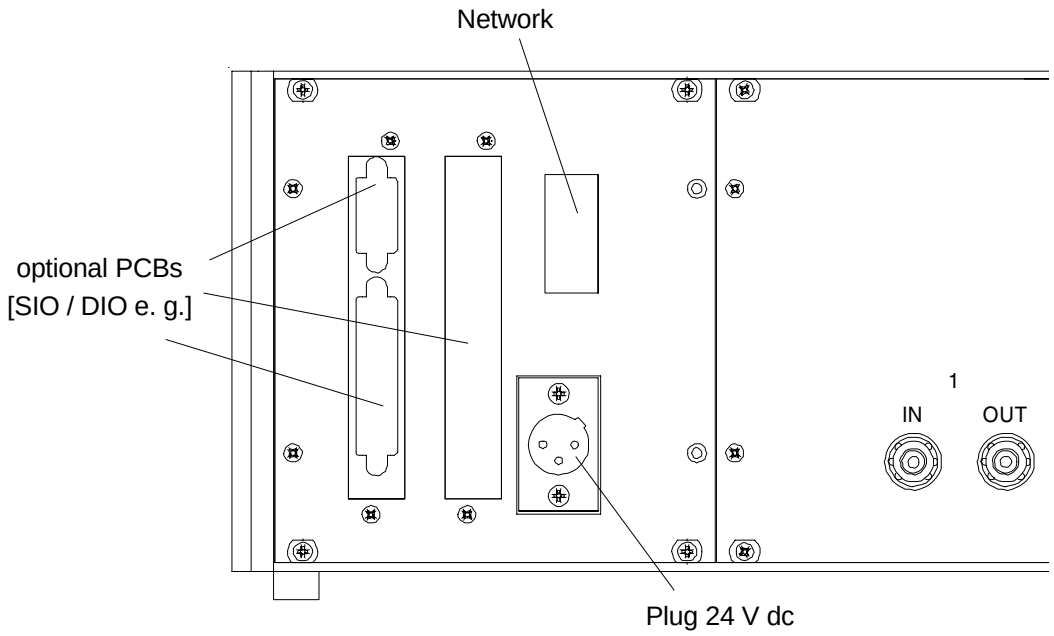

Fig. 5-17: MLT 4, Voltage supply

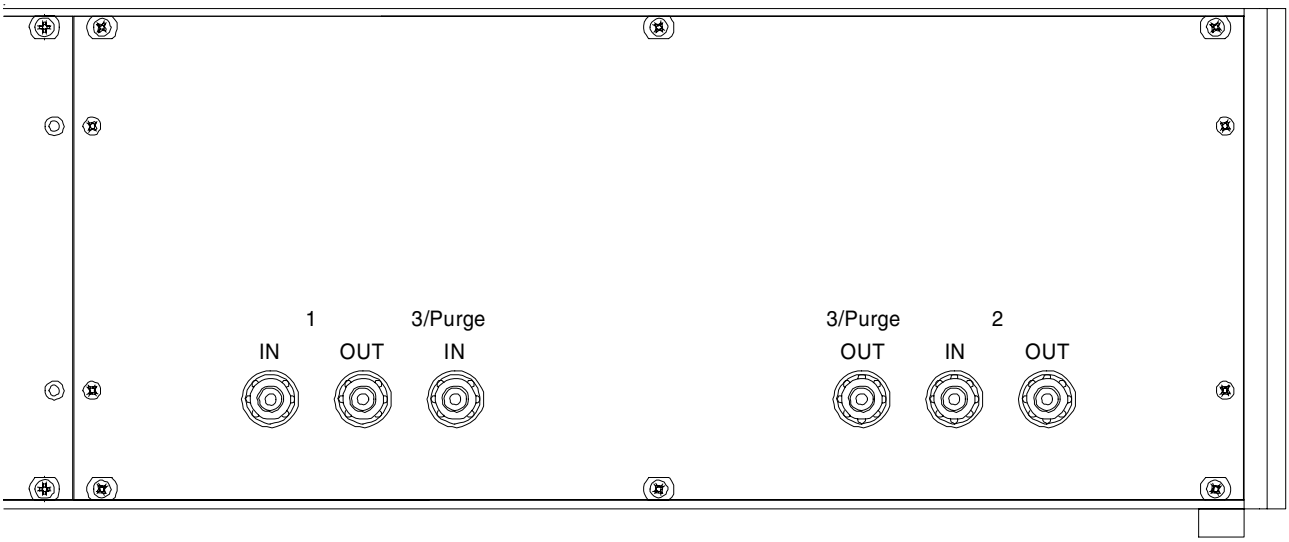

Fig. 5-18: MLT 4, gas connections

in = Gas inlet
out = Gas outlet
1 = measuring channel 1
2 = measuring channel 2
3 = measuring channel 3
Purge = purge gas (housing)

Note!
Purge option combination is only available with one or two channel analyzer.

5.4.5 CAT 200

CAT 100 analyzers are designed for wall mounting and intended to be outdoor installed taking into account the ambient temperature limits as given in the technical data section of this manual.

.

This current instruction manual covers using the CAT 200 analyzer for general purpose applications only!

Installation, startup and maintenance for operation in hazardous areas are described in detail in a separate instruction manual, shipped together with each such analyzer and are not subject of the current instruction manual!

5.4.5.1 Wall Mounting

Mount CAT 200 analyzers to a wall or stand by utilizing 4 through holes of ø 15.9 mm (0.63 in) each.

CAUTION

CAT 200 -- HEAVY INSTRUMENTS !

The analyzer variations CAT 200 intended to be wall mounted and/or outdoor installed weigh up to 70 kg, depending on included options!

Use two person and/or suitable tools for transportation and lifting these instruments!

Take care to use anchors and bolts specified to be used for the weight of the units!

Take care the wall or stand the unit is intended to be installed at is solid and stable to hold the units!

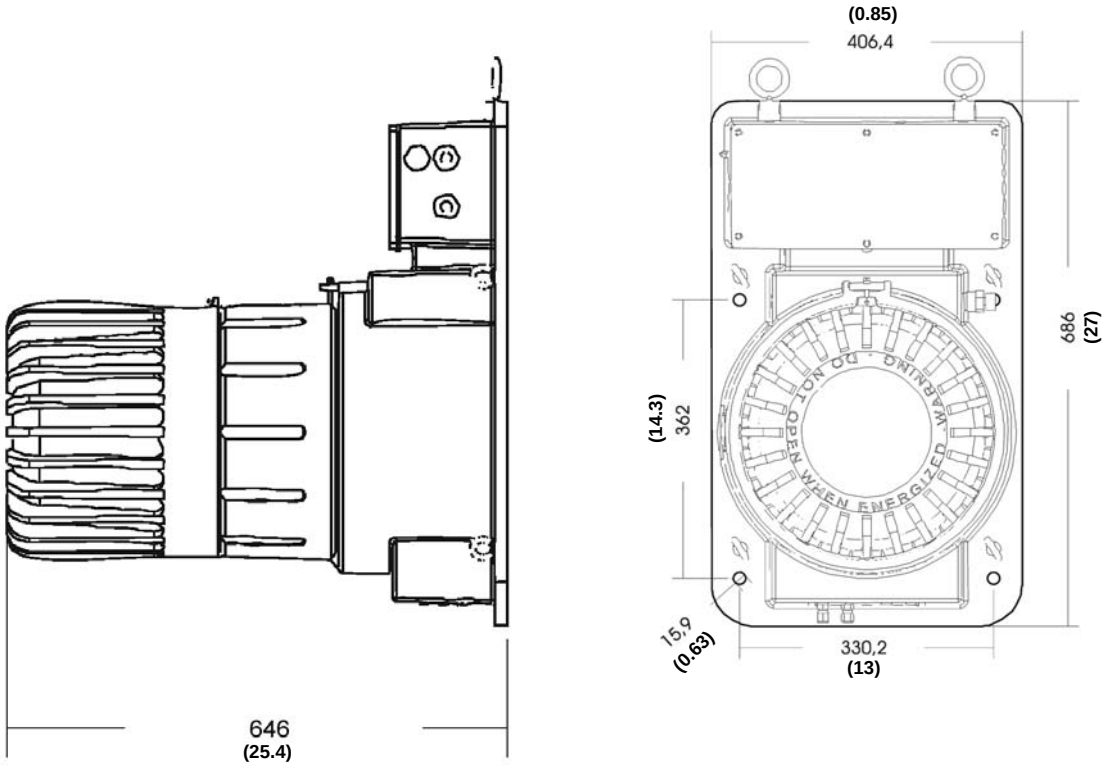

Fig. 5-19: Drill drawing CAT 200 *[all dimensions in mm (Inch)]*

5.4.5.2 Electrical Connections

WARNING

ELECTRICAL SHOCK HAZARD!

Installation and connecting mains and signal cables are subject to qualified personnel only taking into account all applicable standards and legislative requirements!

Failure to follow may cause warranty invalidation, property damage and/or personal injury or death! Mains and signal cables need to be connected to internal srew terminals requiring to work at open housing near life parts!

Installation of this instrument is subject to qualified personnel only, familiar with the resulting potential risks!

CAT 200 gas analyzers do not provide a mains switch! A mains switch or circuit breaker has to be provided in the building installation. This switch has to be installed near by analyzer, must be easily operator accessible and has to be assigned as disconnector for the analyzer.

The junction box must be protected by fuse supply (10 A fuse) which has a breaking capacity adjusted to the short circuit of the equipment.

The analyzer provides a protective earth terminal. To prevent electrical shock hazards the instrument must be connected to a protective earth. Therefore the instrument has to be connected to mains by using a three wire mains cable with earth conductor!

Any interruption of the earth connector inside or outside the instrument or disconnecting the earth terminal may cause potential electrical shock hazzard!

The analyzer does not provide a mains switch and is operable when connected to power.

To ensure protection against water and dust use cable glands with minimum IP 65 classification!

The junction box provides at its left side one threat M20x1.5 and at its right side up to three threats M16x1.5 for installing cable glands.

The left gland is the mains power cord entry, the right side glands for signal cables.

Not used threats must be sealed by approved sealing plugs (factory delivery condition).

- This analyzer model is supplied by an internatl wide range power supply, automatically adapting to the voltage at site.
- All cables (mains power cord and signal cables) are connected via screw terminals located inside an junction box right above the analyzer dome.
- See the label on the junction box cover for detailed terminal assignments.
- Cables entering the junction box should be kept as short as possible when inside the box.
- Mains terminals are capable to connect cables up to 4 mm^2 cross section.

WARNING

EXPLOSION HAZARD!

Instruments covered by an approval for hazardous areas (identifiable by a term „ATEX" on the nameplate label) MUST be equipped with cable glands, marked EEx e and ATEX!

This applies, too, when the instrument currently is NOT installed in a hazardous area!

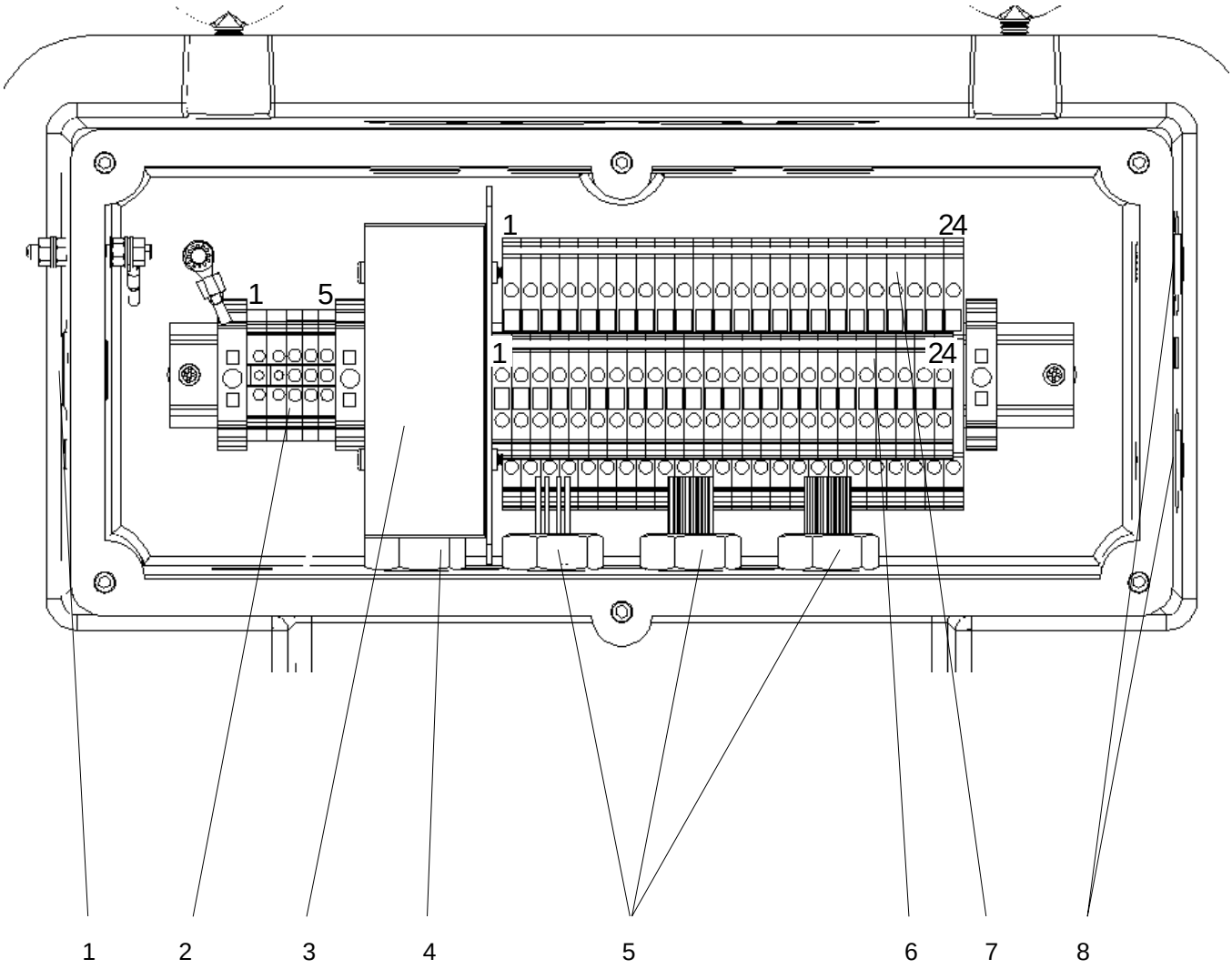

Fig. 5-20: CAT 200, Junction box, interior view

1	Threat for mains cord cable gland	5	Flameproof feed thru, signals (3x)
2	Mains screw terminals	6	Upper signal screw terminals (24)
3	Mains EMC filter	7	Lower signal screw terminals (24)
4	Flameproof feed thru, mains	8	Threats for signal cables cable glands (3x)

Note!

For information about terminal assignments see section 21.5).

5.4.5.3 Gas Connections

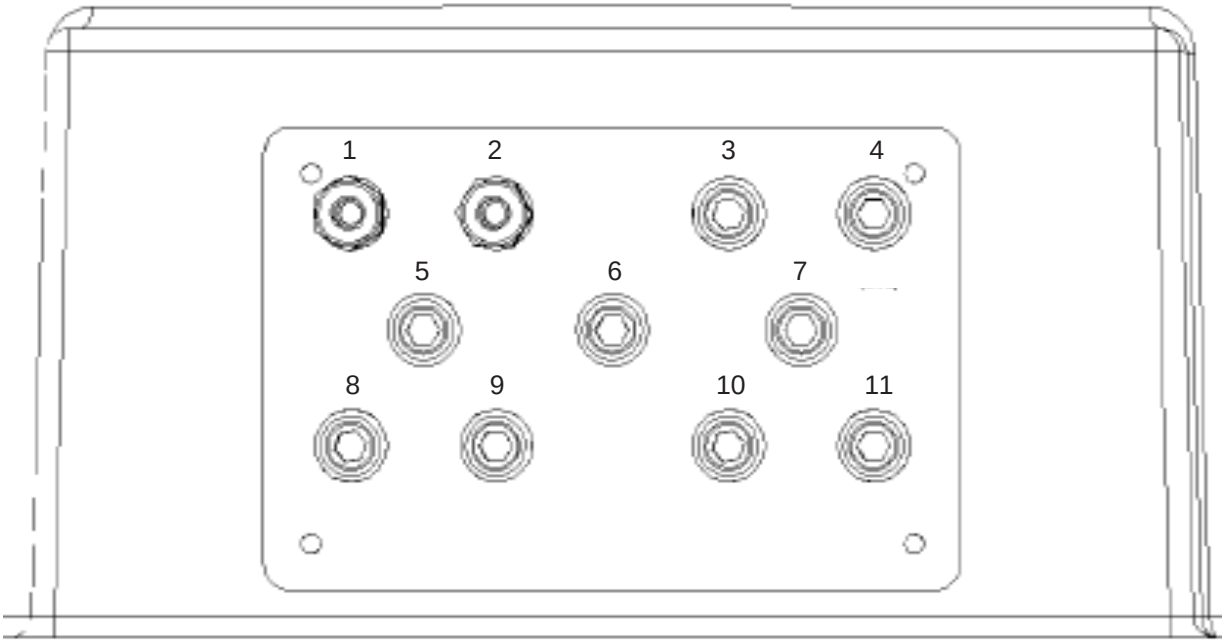

Fig. 5-21: CAT 200, Analyzer's bottom view at gas fittings

Analyzer Configuration	Gas Fitting Assignment			
Serial Tubing	1 - Gas in	2 - Gas out		
Parallel tubing	1 - Gas in (ch 1)	2 - Gas out (ch 1)	3 - Gas in (ch 2)	4 - Gas out (ch 2)
	5 - Gas in (ch 3)	6 - Gas out (ch 3)	7 - Gas in (ch 4)	8 - Gas out (ch 4)
Serial tubing with 1 solenoid valve block (option)	2 - Gas out (Sample, zero & span gas)*	5 - Span gas 1 in	6 - Span gas 2 in	8 - Zero gas in
	7 - Sample gas in			
Parallel tubing with 2 solenoid valve blocks (option)	1 - Gas in (ch 1)	2 - Gas out (ch 1)	3 - Gas in (ch 2)	4 - Gas out (ch 2)
	5 - Span gas 1 in	6 - Span gas 2 in	8 - Zero gas 1 in	10 - Zero gas 2 in
Parallel tubing with differential measurement (option)	1 - Gas in (ch 1)	2 - Gas out (ch 1)	3 - Gas in (ch 2)	4 - Gas out (ch 2)
	5 - Gas in (ref 1)	6 - Gas out (ref 1)	7 - Gas in (ref 2)[1] or 10 - Gas in (ref 2)[2]	8 - Gas out (ref 2)[1] or 11 - Gas out (ref 2)[2]
CAT housing purge (option)	7 - Purge gas in	8 - Purge gas out		

* Standard Gas out = gas exhaust, valve block output internally connected to MLT gas input.
Option: Valve block output may be used for external sample handling system (special configuration).
[1] without housing purge [2] with housing purge

Table 5-1: CAT 200, Assignment of gas fittings

Note!

Reference option is only available with single or two channel analyzer.

5.5 Wiring Signal Terminals

Emerson Process Managament has taken any effort during the MLT series development process to ensure electromagnetically compatibility (EMC; concerning emission and immunity), stated by EMC measurements according EN 61326.
Nevertheless EMC is not only influenced by the instrument‘s design, but widely by the installation procedure at site, too. Take care of the following sections and measures described within to ensure safe and trouble-free analyzer operation!

5.5.1 Electrical Connections in General

To minimize electromagnetically interferences by the analyzer‘s environment it is necessary to carefully execute all electrical connections between the analyzer and other instruments:

- It is recommended to use shielded cables for signal lines, only!
  Shield has to be connected to the housing at both ends of one connection (fig. 5-22).

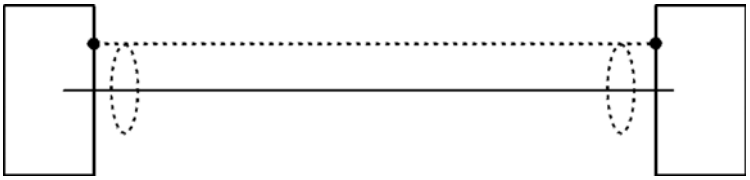

Fig. 5-22:Shielded Signal Cable, shield connected at both ends

Local on-site conditions usually differ from test conditions and may require special measures. This is when strong fields are expected, potentially generating high parasitic currents on the cable shield . Such currents result in differences of potential between connected housings.
Two possible measures to avoid parasitic currents are described, whereat installation personnel familiar with EMC problems has to decide about the use of either measure:

- Shield is connected at one side of the cable only (recommended to the analyzer‘s housing): Protection against external distrubances is increased but influence by parasitic currents is prevented due to opening the ground loop.

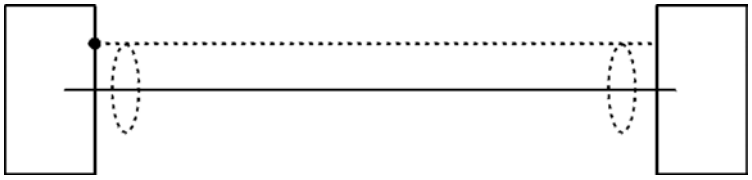

Fig. 5-23: Shielded Signal Cable, shield connected at one end

- Using double-shielded cables:
  In this case one shield is connected to the analyzer‘s housing while the other shield is connected to the external equipment.
  This gives an advantage when both instruments are supplied by different supply networks (e.g. when installed in different buildings).
  This measure is more costlybut offers best immunity against distrubances from outer fields and from parasitic currents.

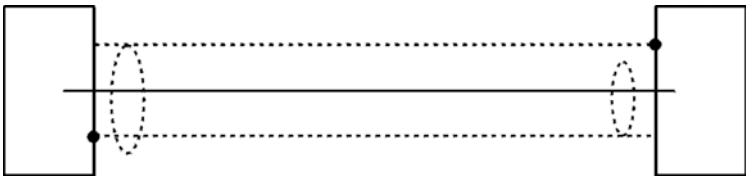

Fig. 5-24:Double-shielded Signal Cable, shields connected at both sides

5.5.2 Wiring Inductive Loads

Switching inductive loads is a standard application generating electromagnetic disturbances: The moment an inductive load (e.g. relay, valve, etc.) is switched off, it‘s magnetic field defies the change of current flow, generating high voltages (up to hundrets of volts) at the coil‘s contacts. This impulse reproduces on connected wires and may influence electrical equipment nearby or destroy signal inputs and/or outputs on electronic boards.
A simple measure helps to avoid such effects:

- ❑ Shunt a silicon diode to the inductive load‘s contacts shorting the voltage impulse just at it‘s source.
  The diode‘s cathode needs to be connected to the positive side of the coil, the anode to the negative side (fig. 5-25).

Suitable filter components are available on request for standard valves.

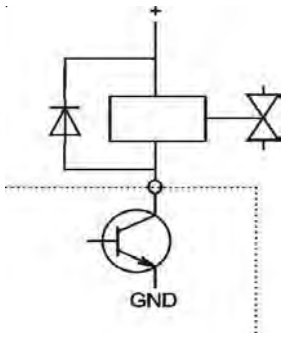

Fig. 5-25: Suppressor Diode for Inductive Loads

5.5.3 Driving Multiple Loads

Another popular application is driving multiple loads within one system by multiple outputs, whereat the supply voltage for the loads is taken from one common source.
To minimize load switching generated disturbances special care is required when wiring the system:

- **AVOID** to „serial" wire the loads‘ power supplies at which the power supply line starts at the source and successively connects all loads (fig. 5-26):

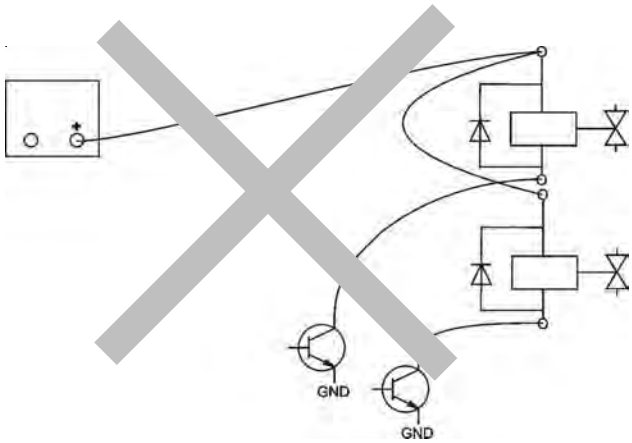

Fig. 5-26: ”Serial” Wiring

- **It‘s better** to apply „parallel" wiring at which each single load is supplied by a separate connection starting from a distribution point: Both „+" and „-" wire of any load are run together, starting at the point of distribution and ending at the load (see fig. 5-27). The effect of minimizing disturbances is intensified when using two-wire drilled cables.

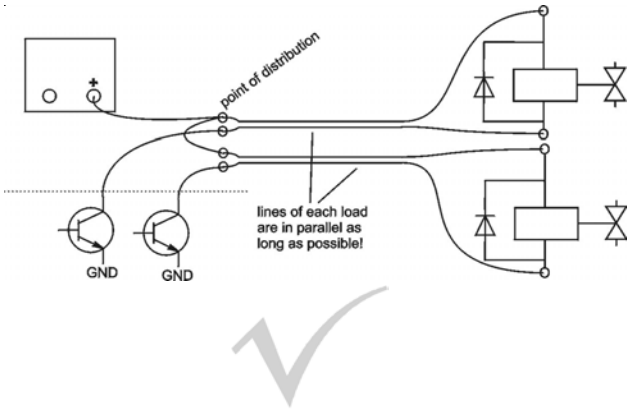

Fig. 5-27: Running Supply Lines "Parallel”

5.5.4 Driving High Current Loads

Loads with currents exceeding the rated currents specified for MLT analyzers outputs must not be driven directly by digital or relay outputs.
Driving such loads requires external relays acting as decoupling devices: The MLT output drives the external relay, which itself drives the load.
It is recommended to use separate supplies for analyzer and high current loads to minimize interferences (fig. 5-28).
As described before using suppressor diodes for inductive loads is strongly recommended!

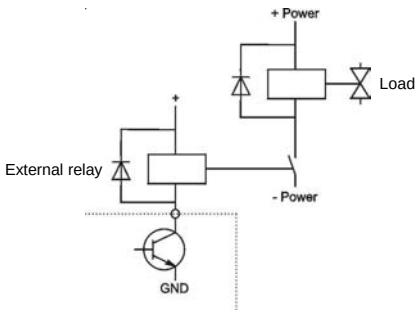

Fig. 5-28: Driving High Current Loads

6. Switching On

Take care of the safety instructions as given at the beginning of this manual while working at and inside the instruments!

Once the instrument has been correctly assembled and installed in accordance with the general instructions given in section 5., the equipment is ready for operation.
The equipment is switched on by providing the required voltage.

Note *(for MLT analyzers only)***!**

The analyzer must be switched on only <u>after</u> switching on all modules connected to the network. Be sure to observe the network termination (section 1.10) !

Upon switching on, the analyzer will perform a self-diagnostic test routine, followed by the binding of all connected analyzer modules.

For additional informations about display messages during start-up see respective software manual.

Note!

Analyzer needs 15 to 50 minutes to warm-up after switch on, depending on the installed detectors and themostatting temperature !
For MLT 3 for gas purity measurment with suppressed ranges of 98 - 100 % CO_2 we recommend to warm-up the analyzer over night and start calibration next morning to achieve best results!

Note *(for analyzers with TEO_2 sensors only)***!**

When installing a new sensor or starting the instrument for the first time, it may take as long as eight hours for the analyzer to purge down to the lowest operating range.

7. Measurement / Calibration / Switching Off

7.1 Measurement

The primary step in the measurement of the concentration of a gas component is the admission of sample gas to the analyzer.

Note!
Take care for the start-up procedure before measurement (chapter 6.)!

❍ Admit sample gas at the respective gas inlet fitting (see Item 5.).

Note!
For MLT 3 for gas purity measurement the sample gas need to be conditionned to the ambient temperature of the analyzer!

❍ Set the gas flow rate to allowable rate.

Before starting an analysis, however, the following should be performed:

❑ entry of the desired MLT parameters,
❑ calibration of the MLT (see Item 7.2).

Note for analyzers with electrochemical EO_2 cell!
Depending on measuring principle the electrochemical EO_2 cell needs a minimum internal consumption of oxygen (residual humidity avoids drying of the cell). Admit cells continuously with sample gas of low grade oxygen concentration or with oxygenfree sample gas could result a reversible detuning of O_2 sensitivity. The output signal will become instabil.
For correct measurement the cells have to admit with a O_2 concentration of at least 0.1 Vol.-%.
We recommend to use the cells in intervall measurement [purge cells with conditioned (dust removal but no drying) ambient air at measurement breaks].
If it is necessary to interrupt oxygen supply for several hours or days, the cell have to regenerate (supply cell for about one day with ambient air). Temporary flushing with nitrogen (N_2) for less than 1 h (e.g. analyzer zeroing) will have no influence to measuring value.

Note for analyzers with electrochemical TEO_2 cell!
For TEO_2 sensor please note that the gas inlet and outlet connections of the analyzer are sealed to prevent exposure of the sensor to air.
Prolonged exposure of the sensor to air can cause extended start up time, reduction of performance or damage to the sensor. Do not remove the sealing caps until all associated sample handling components are installed and the instrument is fully ready for installation.

7.2 Calibration

To insure correct measurement results, zeroing and spanning should be carried out once a week. Other intervals are possible.
The zero-level must always first be set before any other calibrations are attempted.

CAUTION

MLT 1 ULCO and MLT 3 for gas purity measurement have to be calibrated on a daily basis! Other far longer intervals are application dependent (see TÜV suitability test report with prolonged calibrating interval)!

For the calibration procedure the required test gases have to be fed to the analyzer through the respective gas inlets (cf. section 5.3) with a no - back - pressure gas flow rate of about 1 l/min (the same as with sample gas) !

CAUTION

An constant input pressure (± 70 hPa or ±1 psig) between 1,500 to 3,000 hPa (20 to 43 psig) is necessary for sample gas as well as for zero gas and span gas because of internal pressure regulator (different input pressures look at order confirmation).

- For correct adjustment and/or “system calibration” of the analyzer please look at MLT software manual !

General notes!
Each measuring channel of MLT can be equipped with up to four various measurement ranges.
There is the possibility to adjust the sensitivity (span) of the measurement ranges together (standard) or separately.
The zero-gas adjustment is carried out together for all measurement ranges of a measuring channel. Off-set setting (value differing from zero i. e.) can be provided if a corresponding zero gas requires this (e.g. substitute gas instead of zero gas with nitrogen).
The span adjustment can be carried out at common sizing of all measurement ranges in the largest measurement range. Due to a common linearization (small measurement ranges represent merely a range of the complete) for all measurement ranges as standard (divergent procedures look at order confirmation) the specifications for the linearity deviation are valid for all measurement ranges, i. e. for the smallest full-scale range. The calibration deviation to be expected depends on the quality of the test gas and affects all measurement ranges in a similar manner.
Certain applications and legal handicaps can require adjustment of separate measurement ranges, though!

7.2.1 Test Gases

7.2.1.1 Zero Gas

For zeroing, the analyzer has to be purged with nitrogen (N_2) or adequate zero gas [e. g. synth. air or conditionned air (but not for O_2 - measurement)]
.

7.2.1.2 Span Gas

The calibration of all another analyzers should be done with pure span gases in order to prevent interferences between the gases (e. g., CO_2 and CO) measured by the analyzer, using test gas mixtures.
The concentration range of the span gas has to be in a range of 80 - 100 % (70 - 110 %) of the full - scale range of the respective measuring channel. For lower span gas concentrations the measuring accuracy could be lower for sample gas concentrations, which are higher than the span gas concentration! For test gas concentration see certification of the test gas bottles.
Spanning for oxygen measurement can be done using conditionned ambient air as span gas, if the oxygen concentration is known and constant.

To calibrate the MLT 1 ULCO internal H_2O channel (0-3 Vol.-%, used for cross compensation), use water vapor saturated N_2 according to saturation characteristic (Item 22.) as span gas. Purge N_2 through a gas-blubber bottle, filled with distilled water and in a little bit higher ambient temperature as necessary Connect a second vessel into a kyrostat (to hold ambient temperature constant) in series to get defined dew point.

WARNING

Take care of the safety instructions applicable for the gases (sample gases and test gases) and for the gas bottles containing these gases!

CAUTION

Max. permissible gas pressure: 1,500 hPa, except instruments for gas purity measurement (see chapter 5.4.3.1), with integrated valve blocks (see page 5-8) and/or paramagnetic Oxygen sensor (see table page 20-4)!

An constant input pressure (± 70 hPa or ±1 psig) between 1,500 to 3,000 hPa (20 to 43 psig) is necessary for sample gas as well as for zero gas and span gas because of internal pressure regulator (different input pressures look at order confirmation).
All calibration gases need to be kept to the same temperature as sample gas!

The calibration of MLT 1 ULCO must be done using pure test gases.

7.3 Switching Off

Before switching off the analyzer, we recommend first purging all the gas lines for about 5 minutes with zeroing gas (N_2) or adequate conditioned air. The full procedure for shutting down is as follows:

CAUTION

Analyzers with electrochemical EO_2 cell have to be purged with conditioned ambient air prior to disconnect the gas lines !
Then the gas line fittings have to be closed for transport or depositing analyzer.

Analyzers with electrochemical TEO_2 cell have to be purged with Nitrogen (N_2) prior to disconnect the gas lines !
Then the gas line fittings have to be closed for transport or depositing analyzer.

- Admit zeroing gas at the respective gas inlet fitting.
- Set the gas flow to permissible rate.

After 5 minutes have elapsed:

- Switch Off by disconnecting the voltage supply.
- Shut Off the gas supply.
- Disconnect gas lines.
- Close all gas line fittings immediately.

10. Troubleshooting

Take care of the safety instructions as given at the beginning of this manual while working at and inside the instruments!

Working inside the instruments is subject to briefed personnel familiar with potential risks!

10.1 **Instrument has no function** (LCD display is dark)

Possible Causes	Check / Correct
a) External supply voltage is absent:	Check connection mains line → MLT / PS
MLT 1/4: - DC polarity is reversed	Check external power supply Check electrical supply
b) Possible internal failures:	Check internal voltage supply (Section 11.1.1)
MLT 1/4:	Check fuses of PCB “LEM” (Section 12.4)
MLT 2:	Check internal fuses F1 and F2 (Section 12.4)
c) Internal connections incorrect or absent:	Check internal connections:
	Check whether PCB “ACU” is in correct place (Fig. 1-31)
	Check PCB's “ACU-AFP” (front panel) connection cable
d) PCB “AFP” board or LC display defective	Exchange front panel (see 12.2)
e) PCB “ACU” defective:	Replace ACU (see 12.3)

10.2 No / Incorrect Measurement Screen

Possible Causes	Check / Correct
a) Defective network connection:	Check network termination (see section 1.11). Check network connection between platform, analyzer, external modules. Replace connection cable or network module PCB “LEM” if necessary.
b) Analyzer module has not been integrated in the system software (network):	Integrate the analyzer module in the system software (see software manual).
c) Failure in signal processing:	See Section 11.1.
d) EMC radiation via PCB “SIO/DIO”	Incorrect wiring of external actors (section 5.5)
e) PCB “AFP” board or LC display defective	Exchange front panel (see 12.2)
f) PCB “ACU” defective:	Replace ACU 02 (see 12.3)

10.3 Display Messages

Several operating conditions of the analyzer / module are controlled and signalized via corresponding messages of the display.
Failures can be shown at the menu “Status” → “Status details” → “Failures” (Item “4.1.1 Status details” of software manual).

10.3.1 Chopper Fail

Possible Causes	Check / Correct
a) Chopper fail:	Check connection to PCB “PIC” Fig. 1-32) or PCB “DSP” Fig. 1-33) resp.; see section 11.1.3

10.3.2 Raw Signal Too High / Low

Possible Causes	Check / Correct
a) Concentration of sample gas is to high.	Reduce gas concentration. Use another analyzer suitable for the concentration range involved.
b) Incorrect physical zero point	Check and adjust physical zero point alignment (see Section 17.5 / 11.1.6)
c) Contamination of the gas paths	Check if photometric components are dirty, clean or replace the components if necessary (cf. Section 17.). Check and adjust physical zero point alignment (see Section 17.5 / 11.1.6)

10.3.3 Detector signal communication failed

Possible Causes	Check / Correct
a) Failure in signal processing: Detector failure	Check connection to PCB “PIC” Fig. 1-32) or PCB “DSP” Fig. 1-33) resp.; See Section 11.1.4 (IR/UV measurement), Section 11.1.6 (O_2 measurement).
b) Contamination of the gas paths	Check if photometric components are dirty, clean or replace the components if necessary (cf. Section 17.). Check and adjust physical zero point alignment see Section 17.5 / 11.1.6)

10.3.4 Light source

Possible Causes	Check / Correct
a) Failure in signal processing: Light source failure	Check connection to PCB “PIC” Fig. 1-32) or PCB “DSP” Fig. 1-33) resp.; See Section 11.1.2

10.3.5 Detector

Possible Causes	Check / Correct
a) Failure in signal processing: Detector failure	Check connection to PCB “PIC” Fig. 1-32) or PCB “DSP” Fig. 1-33) resp.; See Section 11.1.4
b) Contamination of the gas paths	Check if photometric components are dirty, clean or replace the components if necessary (cf. Section 17.). Check and adjust physical zero point alignment (see Section 11.1.6)

10.3.6 Heater Unit Regulation

Possible Causes	Check / Correct
a) PCB “BHZ” failure	Check PCB “BHZ” (Section 11.2)
b) Voltage supply absent	Check voltage supply (Section 10.1 / 11.1.1)

10.3.7 Temperature Measurement

Possible Causes	Check / Correct
a) Chopper not or not correct connected to PCB “PIC”/“DSP”	Check connection of Chopper → PCB “PIC” (Fig. 1-20) or Chopper → PCB “DSP” (Fig. 1-33)
b) Temperature sensor not or not correct connected / defective (temperature shown in display not in a range of + 15 °C to + 70 °C)	Check connection of sensor → PCB “PIC” (Fig. 1-32, P10 / P20) or sensor → PCB “DSP” (Fig. 1-21). Exchange temperature sensor (Fig. 17-2, Item 3)

10.3.8 Invalid Pressure Measurement

Possible Causes	Check / Correct
a) Instrument without pressure sensor	Check wether software parameter “pressure measurement” is set to “manual measurement”. Check, that correct pressure value is entered.
b) Pressure sensor not or not correct connected / defective (pressure show in display not in a range of 800 hPa to 1,200 hPa)	Check connection of sensor → PCB “PIC” (Fig. 1-32, P1 / P9) or sensor → PCB “DSP” (Fig. 1-33) Exchange pressure sensor.

10.3.9 External Input

Possible Causes	Check / Correct
a) Configuration of PCB “DIO” incorrect	Check correct software configuration of “DIO”
b) EMC radiation via PCB “DIO”	Incorrect wiring of external actors (section 5.5)
c) PCB “DIO” not or not correct connected / defective	Check correct connection of PCB “DIO”. Exchange PCB “DIO”.
d) PCB “ACU” defective:	Replace ACU 02 (see 12.3)

10.4 No or incorrect Analog Outputs / Digital I/O's

Possible Causes	Check / Correct
a) Configuration of PCB “SIO/DIO” incorrect	Check correct software configuration of PCB's “SIO/DIO”
b) EMV radiation via PCB “SIO/DIO”	Incorrect wiring of external actors (section 5.5)
c) PCB “SIO/DIO” not or not correct connected / defective	Check correct connection of PCB “SIO/DIO”. Exchange PCB “SIO/DIO”.
d) Additional PCB “SIA” (more than two analog outputs) not or not correct connected / defective	Check correct connection of PCB “SIA”→“SIO”. (Fig.1-35) Exchange PCB “SIA/SIO”.
e) PCB “ACU” defective:	Replace ACU 02 (see 12.3)

10.5 Calibration not possible

Possible Causes	Check / Correct
a) Incorrect nominal value of span gas	Enter the correct nominal value (certification of span gas bottle) (see software manual)
b) Incorrect zero gas / span gas in use.	Check zero gas / test gas in use
c) Tolerance error.	Switch off tolerance check before starting a calibration (see software manual)
d) Incorrect physical zero point	Check and adjust physical zero point alignment (see Section 17.5 / 11.1.6)
e) Contamination of the gas paths	Check if photometric components are dirty, clean or replace the components if necessary (cf. Section 17.). Check and adjust physical zero point alignment (see Section 17.5 / 11.1.6)

10.6 Fluctuating or erroneous display

Possible Causes	Check / Correct
a) Leakage into gas circuit.	Perform a leakage check (see Section 14).
b) Ambient air contains gas constituent to be measured in excessive concentration.	Purge the instrument.
c) Gas pressure subject to excessive fluctuations.	Check the gas lines preceding and following the instrument. Eliminate any restrictions found beyond the gas outlet fitting. Reduce pumping rate or flow rate.
d) Contamination of the gas paths	Check if photometric components are dirty, clean or replace the components if necessary (cf. Section 17.). Check and adjust physical zero poin alignmentt (see Section 17.5 / 11.1.6)
e) Barometric pressure effects	See Section 10.3.8
f) Temperature below the dew point in the gas paths	Check the temperature of the gas paths and eliminate any reason of condensation. Maintain all temperatures at values at least 10 °C above the dew point of sample gas. Check gas paths and gas conditionning for condensation and clean or exchange.

10.7 Response time too long (t_{90} time)

Possible Causes	Check / Correct
a) Incorrect response time (t_{90} time).	Check the value for t_{90} time (see software manual)
b) Pumping rate inadequate.	Check diaphragms and membranes of gas sampling pump. The feeder line between the sampling point and the instrument is too long. Use a larger, external pump; consider adding a bypass line to the process stream for sampling purposes (see Section 5.3).
c) Contamination of the gas paths	Check if photometric components are dirty, clean or replace the components if necessary (cf. Section 17.). Check and adjust physical zero point alignment (see Section 17.5 / 11.1.6)

11. Test Procedure / Test Points

The housing has to be opened (cf. Section 15) for troubleshooting, for checking the connections and for replacement or cleaning of any of the components of the equipment.

Take care of the safety instructions as given at the beginning of this manual while working at and inside the instruments!

Working inside the instruments is subject to briefed personnel familiar with potential risks!

All measuring points are made to earth (⊥ of detectors PCB “VVS”, Fig. 11-2). (Remove covering hood of detector).

11.1 Signal processing

The principle signal processing with PCB "PSV"is shown in Fig. 11-1.

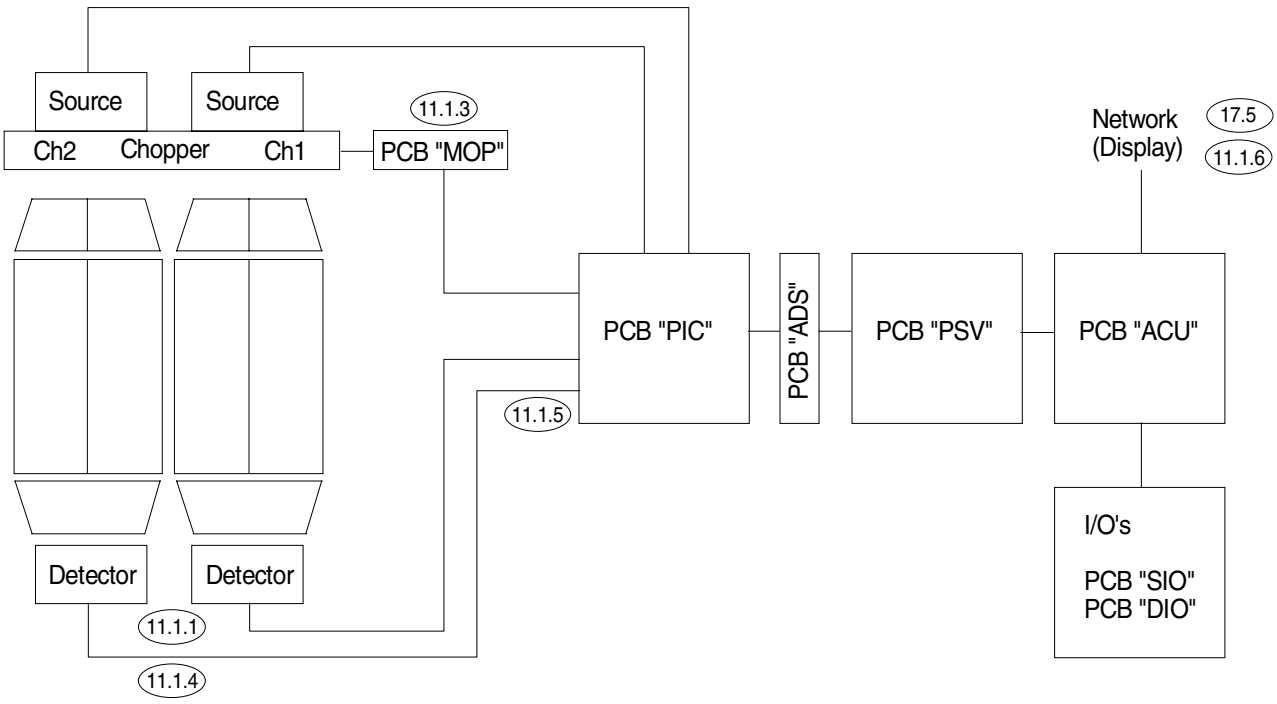

Fig. 11-1: Principle signal processing with PCB "PSV"

11.1.1 Internal Voltage Supply

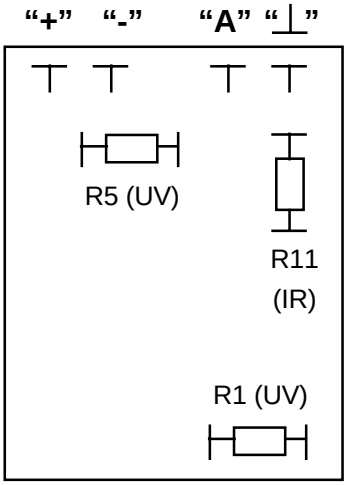

Fig. 11-2: PCB "VVS"

Test point:	"+" or "-" of detector PCB "VVS" (Fig. 11-2)
Measuring instrument:	Digital voltmeter
Signal:	≈ + 6,2 V dc at test point "+" ≈ - 6,5 V dc at test point "-"
Failure:	No signal
Possible reason:	Detector not connected to PCB "PIC" (Fig. 1-20) or PCB "DSP" (Fig. 1-21) External voltage supply absent Internal / external power supply defective (Fuses ?) PCB "PIC"/"DSP" not correctly connected to PCB "ICB" / defective No "+" voltage from the PCB "PIC", in fast of a ground loop of the physics (connection physics → housing, must be ∞)

11.1.2 IR Source

Test point:	Connector of IR source
Measuring instrument:	Ohmmeter
Signal:	≈ 6.8 Ω to 8.6 Ω between the two cables
Failure:	incorrect values
Possible reason:	Source defective Light source is cold: For more - IR - channel analyzer interchange the light sources. Replace the suspect light source (see Section 17.2).

11.1.3 Chopper

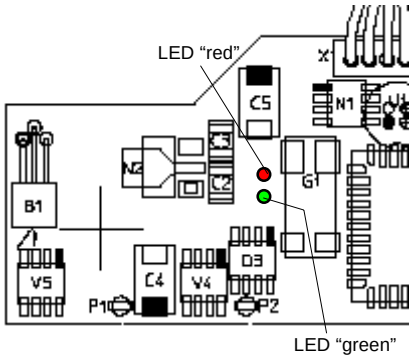

Fig. 11-3: PCB "MOP"
(partial view)

Test point:	PCB “MOP”
Measuring instrument:	optical
Signal:	red LED must be off green LED must be blinking
Failure:	red LED is on / green LED is on permanent
Possible reason:	Chopper not (correct) connected to PCB “PIC” (Fig. 1-32, chopper of channel 1+2 must be connected to P34) or PCB “DSP” (Fig. 1-33) Chopper defective PCB “PIC”/“DSP” not correctly connected to PCB “ICB” / defective

11.1.4 Unamplified Measuring Signal at Detector

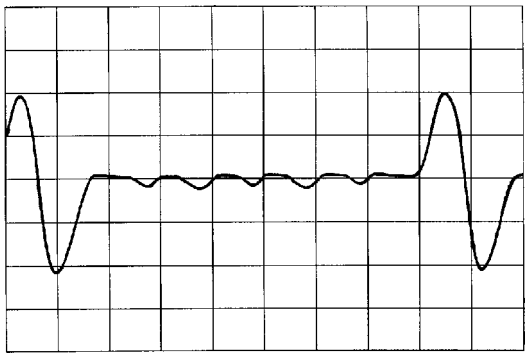

Test point:	“A” and “⊥” of detector PCB “VVS” (Fig. 11-2)
Measuring instrument:	Oscilloscope
Signal:	max. 4 V_{PP} min. 1 V_{PP}
Failure:	incorrect values
Possible reason:	Amplitude adjustment with R11 (IR measurement) or R5 (UV measurement). Amplitude will be bigger for alteration of resistance R11/R5 to smaller values (min. value for R11: 56 kΩ)
Failure:	No signal
Possible reason:	Detector not connected to PCB “PIC” (Fig. 1-32) or PCB “DSP” (Fig. 1-33) Voltage supply absent (Item 11.1.1) Source failure (Item 11.1.2) / Chopper failure (Item 11.1.3) PCB “PIC”/“DSP” not correctly connected to PCB “ICB” / defective

11.1.5 Signal Processing on PCB “PSV”

Test point:	P21.2 (“+”) and P21.3 “⊥” of PCB “PIC” (Fig. 1-32)
Measuring instrument:	Oscilloscope (signal form see 11.1.4)
Signal:	Unamplified Measuring Signal from Detector (Measuring Channel 1) (max. 4 V_{PP} / min. 1 V_{PP}) green LED of PCB “PSV” must be blinking with approx. 15 Hz
Failure:	No signal / incorrect values green LED is out / on permanent
Possible reason:	Detector signal (channel 1) failure (Item 11.1.4) Voltage supply absent (Item 11.1.1) Source failure (Item 11.1.2) / Chopper failure (Item 11.1.3) PCB “PIC” not correctly connected to PCB “ICB” or “ADS” / defective PCB “PSV” not correctly connected to PCB “ICB” or “ADS”/ defective

11.1.6 Physical Zero Alignment

For physical zero adjustment the raw signal of respective measuring channel is set to ± 100.000 counts while purging instrument with zero gas.

The raw measuring values can be shown by pressing "Status" (F2) → "RawMeas." (F2).

11.1.6.1 IR Measurement

For set of physical zero adjustment see Item 17.5 please.

11.1.6.2 Paramagnetic Oxygen Measurement

Set physical zero adjustment by alteration the position of photodiode of the sensor.

A further test is to measure the output voltage of the sensor while purging with test gas.

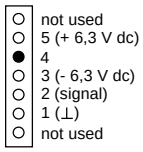

Test point: “Pin 2” of P23 of PCB “PIC” (Fig. 1-32, too)

Signal: ≈ + 4 V dc
(purging with test gas 25 Vol.-% / 100 Vol.-% oxygen (O_2), depending on installed sensor)

11.1.6.3 Electrochemical Oxygen Measurement (EO_2)

For set / check of sensor see Item 18.2 and 18.3.4 please.

11.2 Heating Unit

Test point:	PCB “BHZ” (Fig. 11.4) of heater unit (Fig. 1-21. 1-24 and 1-27)
Measuring instrument:	optical
Signal:	red LED's of heater transistors must be off green control LED must be blinking
Failure:	red LED is on / green LED is out
Possible reason:	Heater transistor defective (exchange PCB “BHZ”) Check voltage supply of BHZ Check “all internal connections” → PCB “BHZ”

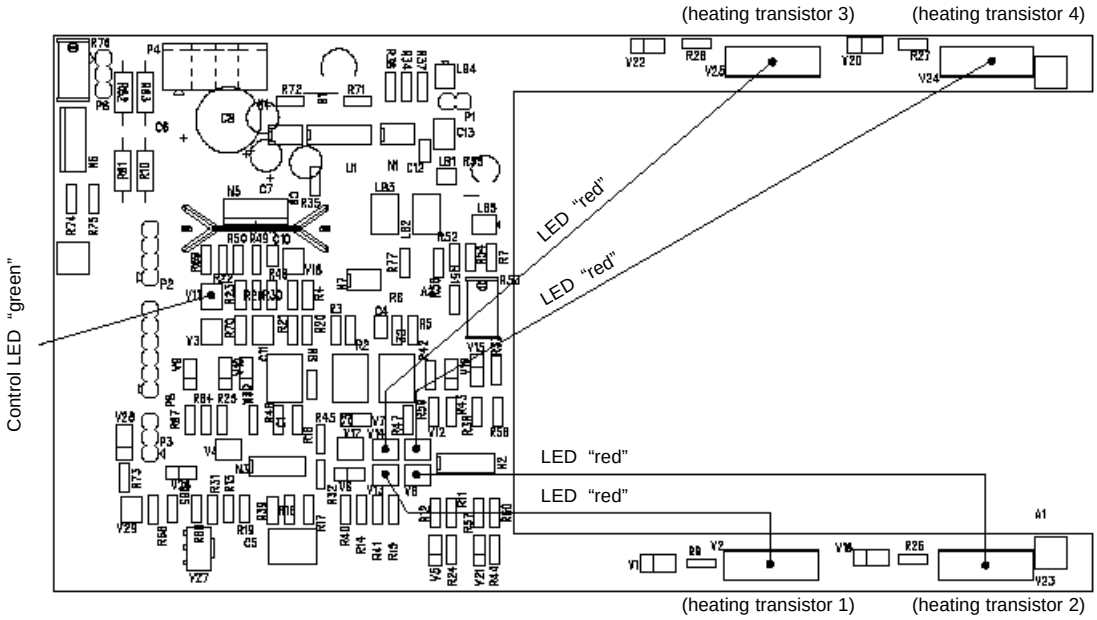

Fig. 11-4: PCB "BHZ” *(position of signal LED's / heating transistors)*

11.3 Troubleshooting Instructions for PCB DSP01

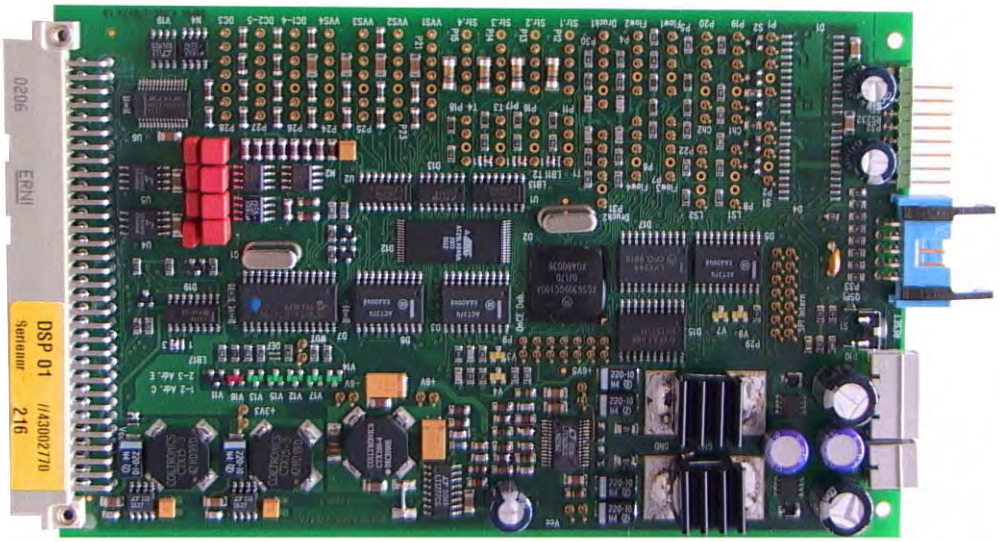

Fig. 11-5: PCB "DSP01"

This chapter contains purposeful instructions for troubleshooting when operating a DSP01 pcb (substitute for PIC02-pcb and PSV02-pcb, e.g. when raw count = 0 counts).
This instructions manual provides a troubleshooting procedure that enables you to check DSP01 for errors step by step.
Basically, LED signals are explained and soldering pads on DSP01 pcb are checked out for correct configuration.
Descriptions of soldering pads that are not mentioned in this instructions manual you will find in the technical description of DSP01 pcb.

CAUTION

The electronic parts of the analyzer can be irreparably damaged if exposed to electrostatic discharge (ESD).

Take care to follow all safety measures against ESD when handling DSP01 pcb.
That pcb is extremely sensitive against ESD and inappropriate handling !

11.3.1 Inspection of LEDs on component side of DSP01

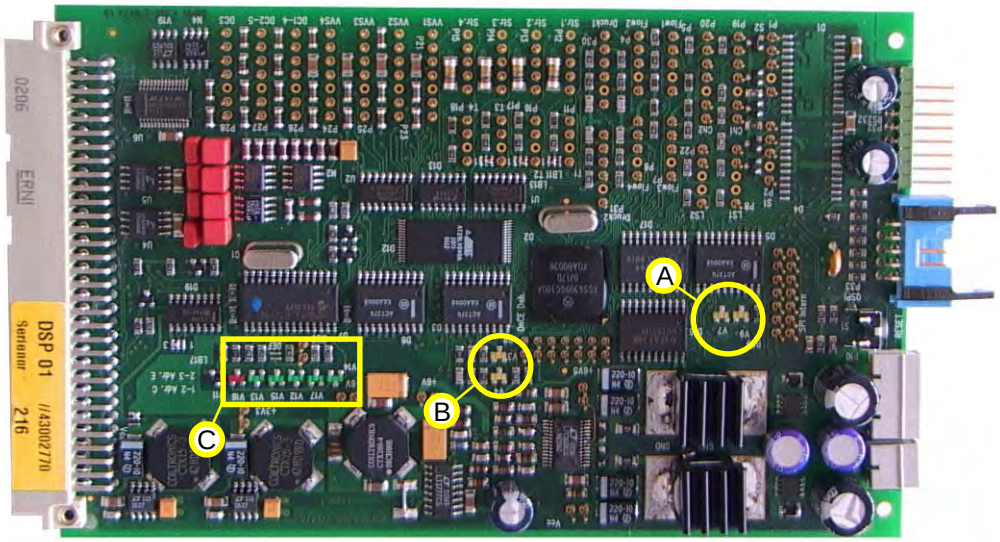

Fig. 11-6: LEDs on component side of PCB "DSP01"

If you presume any malfunction of DSP01 pcb, first step is to check out correct activity / status of the LEDs on component side of the pcb.
In the picture above, all elements that have to be inspected are marked in yellow. .
Check out status of the LEDs in areas A,B and C as described below.

Please note, that independent from an agreeing status of the LEDs with this description, furtheron a number of soldering pads (please see following pages) are to be inspected, before any failure of DSP01 can be determined.

A

On the right you see the LEDs that are to be inspected in area A in enlarged depiction.

During operation, LEDs **V7 (CH3) and V9 (CH4) must be flashing,** if a detector is employed on the appropriate detector connection.

In case that the concerning channel is not used, status of the appropriate LED does not matter.

Correct status during operation displays correct function of synchronization (lock display).

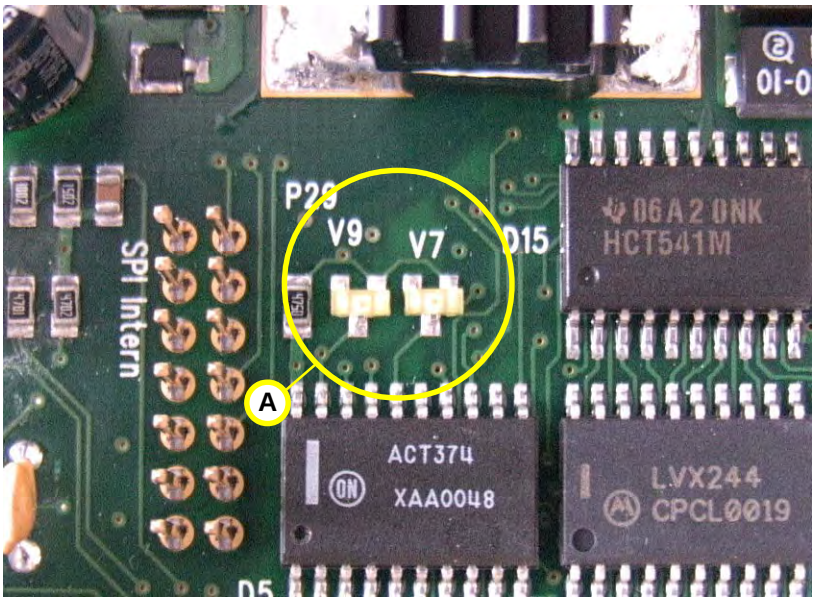

Fig. 11-6a: LEDs "V7" and "V9" *(PCB "DSP01")*

B

On the right you see the LEDs fo area B in enlarged depiction.

During operation, the LEDs **V3 (CH1) and V4 (CH2) must be flashing,** if a detector is employed on the concerning detector connection.
In case that the appropriate channel is not used, status of the concerning LEDs does not matter.

Correct status during operation displays correct function of synchronization (lock display).

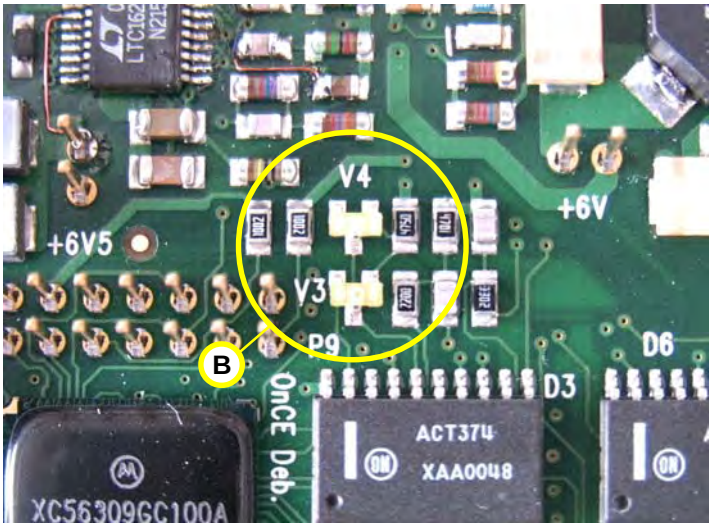

Fig. 11-6b: LEDs "V3" and "V4" *(PCB "DSP01")*

C

At last, inspect the LEDs in area C (see Fig. 11-6c on the right). The **green** LEDs **must be flashing**, the **red** LED must be **off** (if the red LED is active, DSP01 is operating in DEFAULTMODE, i.e. configuration is erroneous. In that case, please note description of soldering pad „DEF" (LB3), Jumper P40 as well as of the single LEDs in section 11.3.4.1)

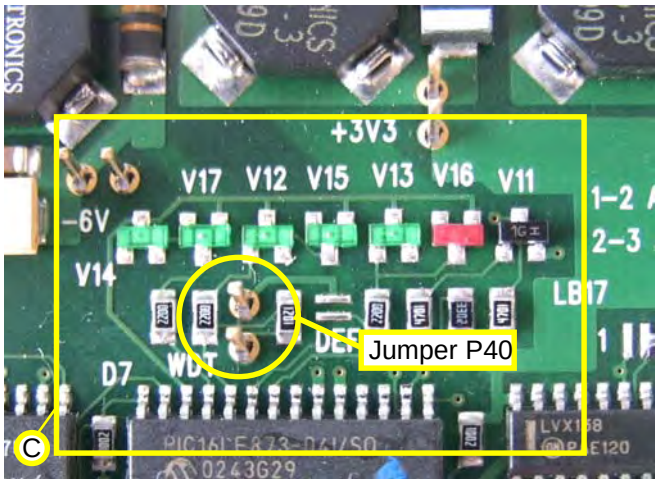

Fig. 11-6c: LEDs "V12" to "V17", Jumper "P40"
(PCB "DSP01")

After carrying out the described inspection of the LEDs on the component side of DSP01 pcb, carry on with inspection of the soldering pads on the soldering side as described on the following pages.

11.3.2 Inspection of soldering pads of DSP01

For that part of troubleshooting, and especially for inspection of soldering pads LB1 and LB2, turn the soldering side of DSP01 up.

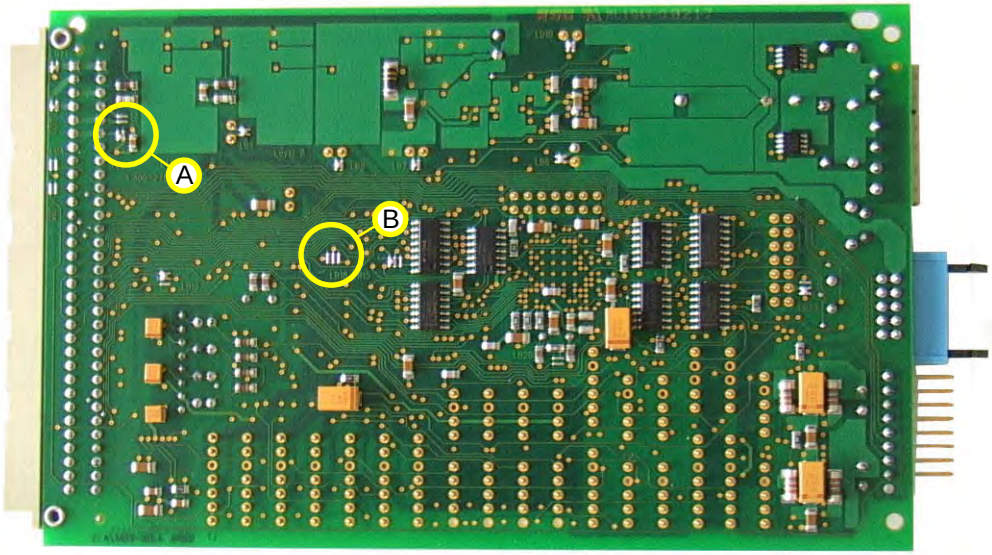

Fig. 11-7: Soldering pads on soldering side of PCB "DSP01"

Areas A and B where soldering pads LB1, LB2 and LB18 are located in, are marked in yellow in the depiction above.
Below you see the soldering pads in areas A and B in enlarged depiction.

A

Soldering pads LB1 and LB2 must be configured as shown in the picture. (**LB1 open**, i.e. +5V of DSP01 are not used as supply voltage for ICB20 bus pcb and **LB2 closed**, i.e. GND of DSP01 must be connected to GND of ICB20 bus pcb).
If configuration differs from description above, communication problems between DSP and ACU can arise (reconfiguration necessary !).

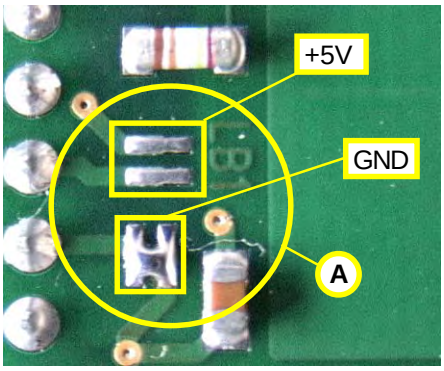

Fig. 11-7a: Soldering pad "LB1" and "LB2 *(PCB "DSP01")*

B

Soldering pad LB18 must be **2-3 closed.**
With that, troubleshooting procedure is finished. Please read the following consideration to evaluate the inspection.

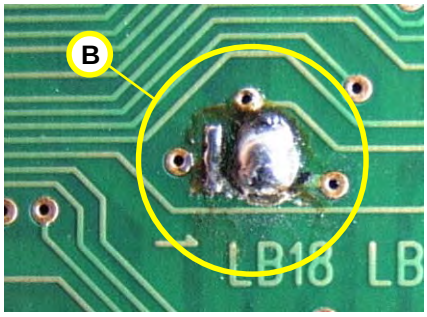

Fig. 11-7b: Soldering pad "LB18" *(PCB "DSP01")*

11.3.3 Evaluation

When inspection of the DSP is finished you can evaluate it as follows:
(Schematic diagram of inspection)

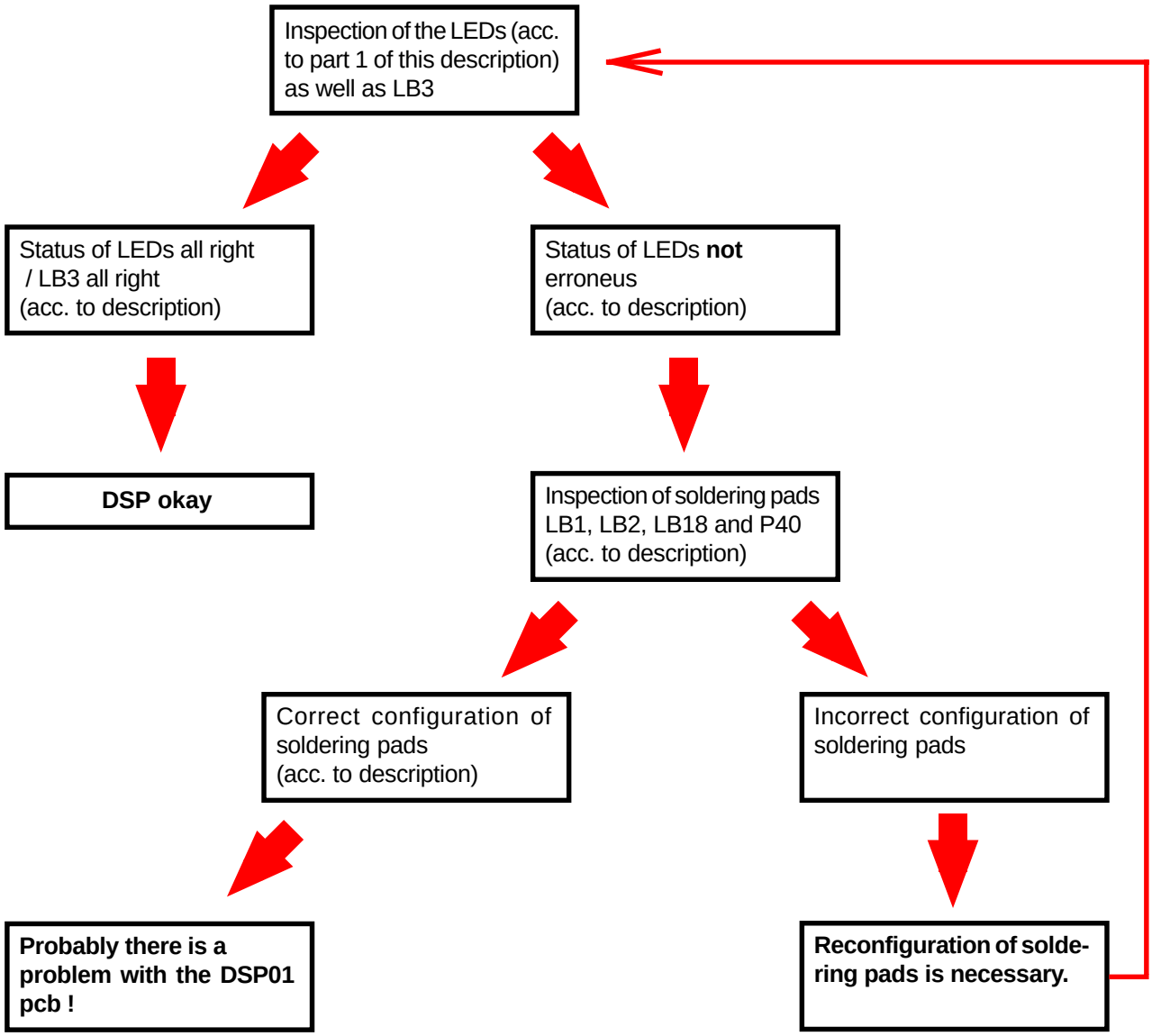

Fig. 11-8: Schematic diagram of inspection of PCB "DSP01"

11.3.4 Appendix

11.3.4.1 Description of soldering pad DEF (LB3):

Basically, soldering pad LB3 / DEF must be **open**.
Configuration of that soldering pad causes the following operating modes:

open: „**NORMAL-MODE**“

closed: „**DEFAULT-MODE**“.

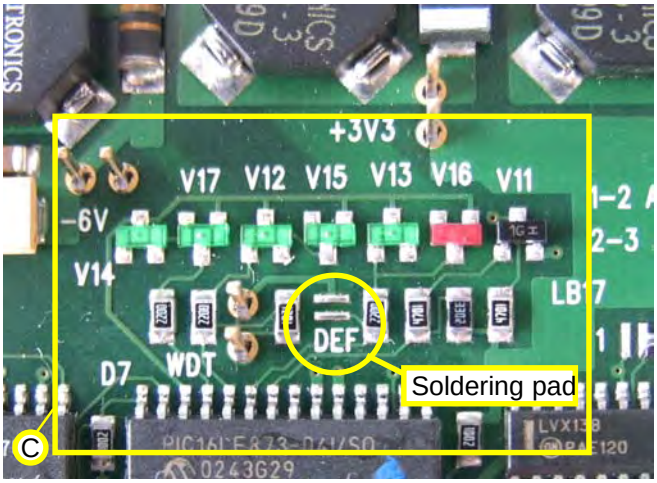

Fig. 11-9: Soldering pad “DEF/LB3” *(PCB "DSP01”)*

11.3.4.2 Definition of LEDs:

Both of the following tables contain definitions of LEDs as well as the **Default configurations of the soldering pads.**

Mode	**LB3**	**LB18**	**P40**
Default	close	2-3	x
LED	**OK**	**Comment**	**Error**
V16	on	always	on or off
V13	off	always	on or off
V15	flash	MAX1400(DC)	on or off
V12	flash	F Sensors	on or off
V17	flash	Source current	on or off
V14	flash	Chopper	on or off
V3	flash	Ch_signal 1	on or off
V4	flash	Ch_signal 2	on or off
V7	flash	Ch_signal 3	on or off
V9	flash	Ch_signal 4	on or off

Table 11-1: Definition of LEDs/Default configuration of soldering pads *(PCB "DSP01”)*

Mode	**LB3**	**LB18**	**P40**
Normal	open	**2-3** (flash enable 1-2 (for programm-update), must be 2-3)	open
LED	**OK**	**Comment**	**Error**
V16	off	always	on or off
V13	flash	T / P Sensors (Pressure- and Temp. sensor)	on or off
V15	flash	MAX1400(DC) A/D-converter (DC channels)	on or off
V12	flash	F Sensors (Flow sensors)	on or off
V17	flash	Source current	on or off
V14	flash	Chopper	on or off
V3	flash	Ch_signal 1 (Detector 1)	on or off
V4	flash	Ch_signal 2 (Detector 2)	on or off
V7	flash	Ch_signal 3 (Detector 3)	on or off
V9	flash	Ch_signal 4 (Detector 4)	on or off

Table 11-2: Definition of LEDs/Normal configuration of soldering pads *(PCB "DSP01")*

12. Removal / Replacement of Components

Exchange components if requested by repair or servicing

CAUTION

HIGH TEMPERATURES !

While working at photometers and/or thermostated components inside the analyzers hot components may be accessible!

Take care of the safety instructions as given at the beginning of this manual while working at and inside the instruments!

Working inside the instruments is subject to briefed personnel familiar with potential risks!

12.1 Removal / Replacement of PCBs (in preparation)

12.1.1 Rear Mounting Slots (in preparation)

12.1.2 Internal Slots (in preparation)

12.2 Removal / Replacement of Operation Front Panel

Front panel plate together with LC display and circuit board AFP 01 constitutes an unit. Therefore, the front panel has to be disassembled completely when one component of the unit is out of order.

Take care of the safety instructions as given at the beginning of this manual while working at and inside the instruments!

Working inside the instruments is subject to briefed personnel familiar with potential risks!

- ❍ Open the front panel / housing (cf. Section 15).
- ❍ Remove the cable (ACU - AFP 01 connection) from the circuit board ACU.
- ❍ Remove all optional mounted components from front panel.
- ❍ Exchange complete front panel unit .
- ❍ Assemble all optional mounted components to new front panel.
- ❍ Re-attach the cable (ACU - AFP 01 connection) to the circuit board ACU.
- ❍ Close the instrument (i.e., re-attach the front panel, see section 15.).

12.3 Replacement of Buffer Battery on the ACU 02

Take care of the safety instructions as given at the beginning of this manual while working at and inside the instruments!

Working inside the instruments is subject to briefed personnel familiar with potential risks!

12.3.1 Removal of ACU 02

Use the following steps to remove the ACU 02 board (see Fig. 1-31, too):

❍ Open the front panel / housing (cf. Section 15).

For analyzers:

❍ Remove the cable (ACU - AFP 01 connection) from the circuit board ACU 02.

❍ Push the card ejector for the ACU 02 downwards and remove the board.

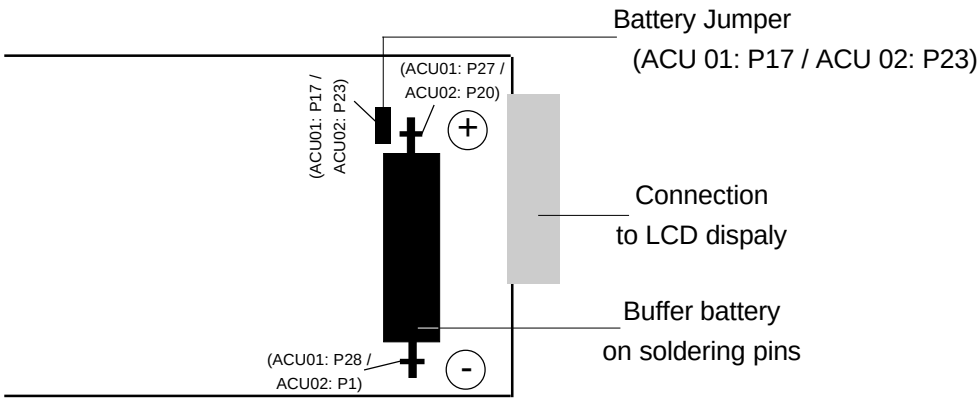

Fig. 12-1: Controller Board ACU *(partial view, component side)*

12.3.2 Replacement of Buffer Battery

Use the following procedure to replace the battery:

❍ Remove the ACU 02 (see 12.3.1).

❍ Remove the jumper “P23” (ACU02) or “P17” (ACU 01) for battery buffer (Fig. 12-1).

All data and compensation values entered by the user will be deleted (RAM-fail)!

❍ Unsolder the battery from the soldering pins (see Fig. 12-1).

❍ Solder the new battery (Ordering No. 03 765 180) to the soldering pins (see Fig. 12-1).

Verify polarity when soldering the new battery (Fig. 12-1) !
Do not short circuit battery !

After the replacement:

❍ Re-insert the jumper for battery buffer (Fig. 12-1).

❍ Install the ACU 02 (see 12.3.3).

12.3.3 Installation of ACU 02

❍ Tilt the card ejector of the ACU 02 upwards and put in the card until the catch locks into place.

❍ Re-attach the cable (ACU 02 - AFP 01 connection) to the circuit board ACU 02.

❍ Close the instrument (i.e., re-attach the front panel, see section 15.).

❍ Switch on instrument.

Now all the data required by the user can be entered again, e.g. system parameters.

12.4 Fuses

Take care of the safety instructions as given at the beginning of this manual while working at and inside the instruments!

Working inside the instruments is subject to briefed personnel familiar with potential risks!

In case of exchanging fuses the customer has to be certain that fuses of specified type and rated current are used. It is prohibited to use repaired fuses or defective fuse holders or to short-circuit fuse carriers (fire hazard).

After visual checking, check the fuses with an ohmmeter.
If low impedance has been measured, the fuse is in order.
High impedance means, the fuse is out of order and must be replaced.

12.4.1 MLT 2

❍ Open the housing (cf. Section 15.2).

❍ Take out and check the fuses (Fig. 12-2 and 1-15a).
Replace the fuse(s) if necessary [T 6.3 A / 250 V (5 x 20 mm)].

❍ Close the housing (cf. Section 15.2).

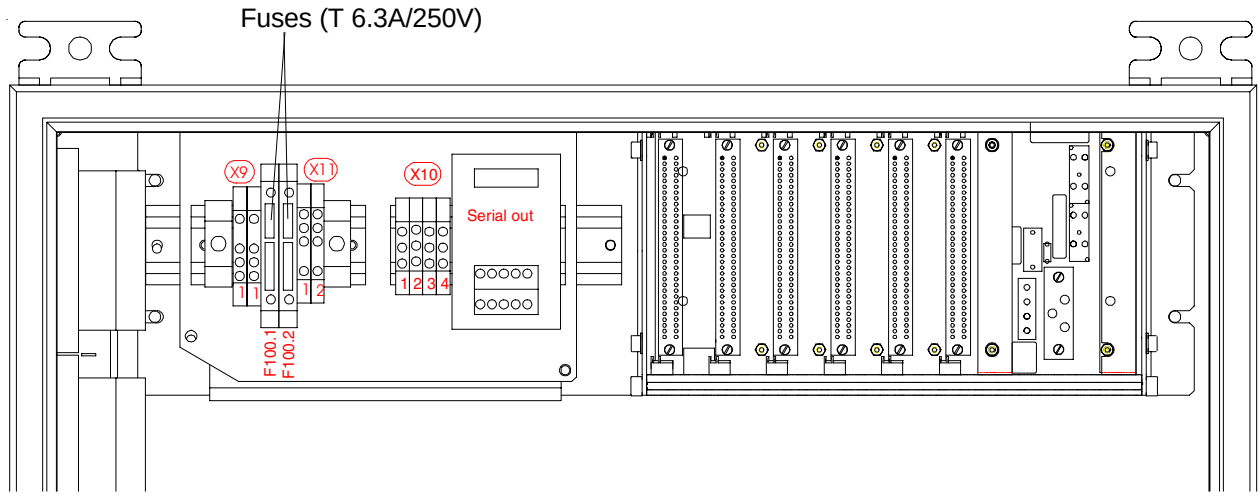

Fig. 12-2: Fuses MLT 2 *(partial inside view, drawing without front panel)*

12.4.2 MLT 1 / 4

The fuses for 24 V dc Input are mounted on the PCB “LEM”.

❍ Remove PCB “LEM” (see Section 12.1).

❍ Take out and check the fuses (Fig. 12-3). Replace the fuse(s) if necessary.
Two pieces of spare fuses are on the PCB (Fig. 12-3).

❍ Insert PCB “LEM” (see Section 12.1) and reclose the instrument.

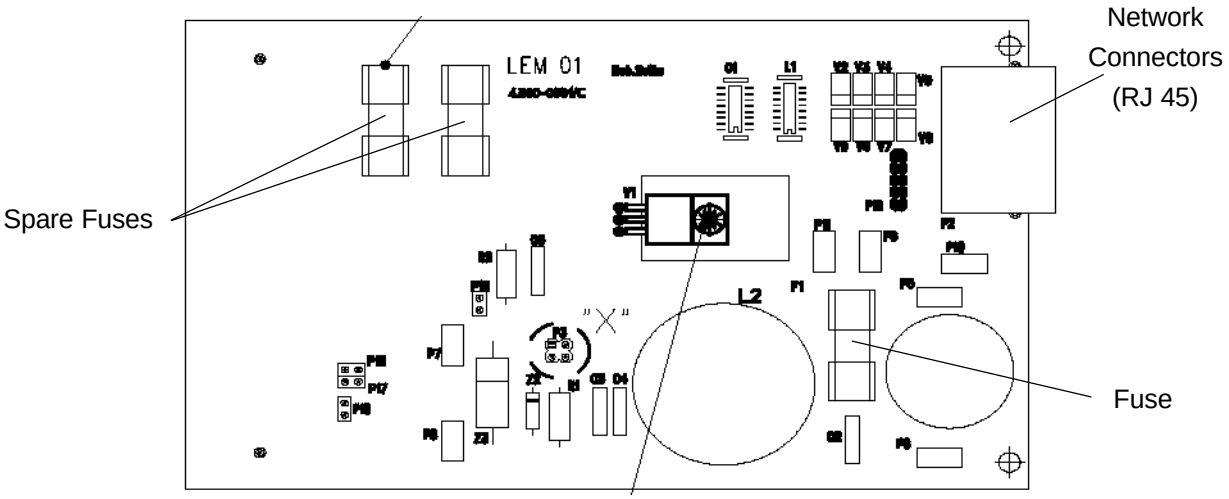

Fig. 12-3a: Fuses PCB LEM 01 *(component side)*

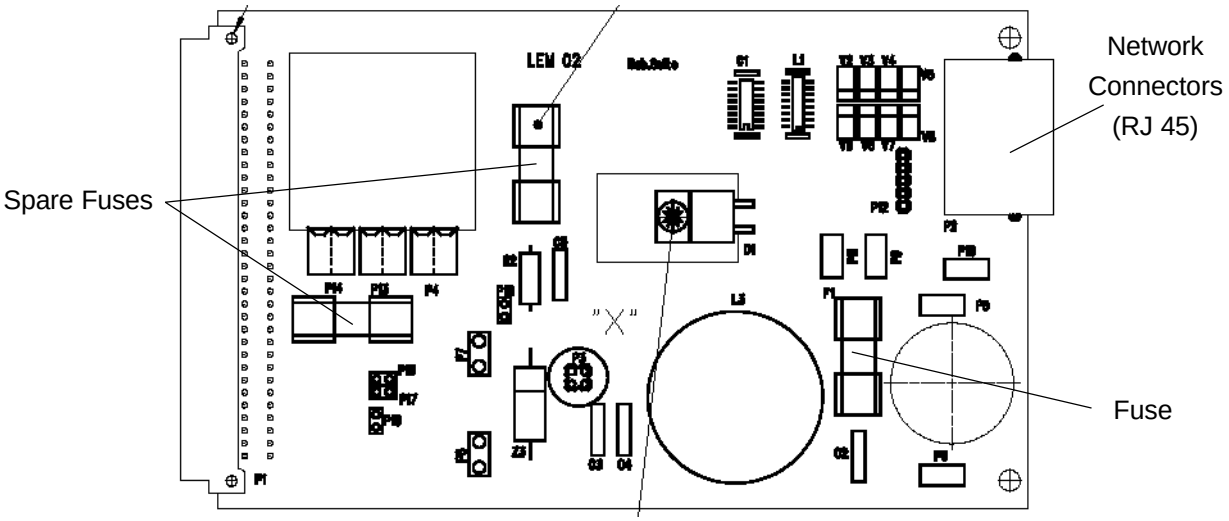

Fig. 12-3b: Fuses PCB LEM 02 *(component side)*

12.5 Connect / Disconnect UV Source and Power Supply for UV Source

The cover of the housing and the front panel plate has to be disassembled to have access to the cable from the UV source to connect it with the power supply for UV source.

WARNING

HIGH VOLTAGE !

The optional UV lamp operates with high voltage (Power Supply UVS) !

WARNING

UV SOURCE !

Ultraviolet light from UV lamp can cause permanent eye damage !
Do not look directly at the ultraviolet source !

WARNING

TOXIC SUBSTANCE !

The optional UV lamp contains mercury. Lamp breakage could result in mercury exposure ! Mercury is highly toxic !

If the lamp is broken, avoid any skin contact to mercury and inhalation of mercury vapors !

Take care of the safety instructions as given at the beginning of this manual while working at and inside the instruments!

Working inside the instruments is subject to briefed personnel familiar with potential risks!

- Open the front panel / remove cover from MLT housing (cf. Section 15).
- Take the cable from the UV source (part no. 42711213) out of the thermostat controlled compartment to the power supply for UV source located behind the removed front panel
- Plug in the cable from UV source on the connector on top of the power supply for UV source (part no. 42715072).

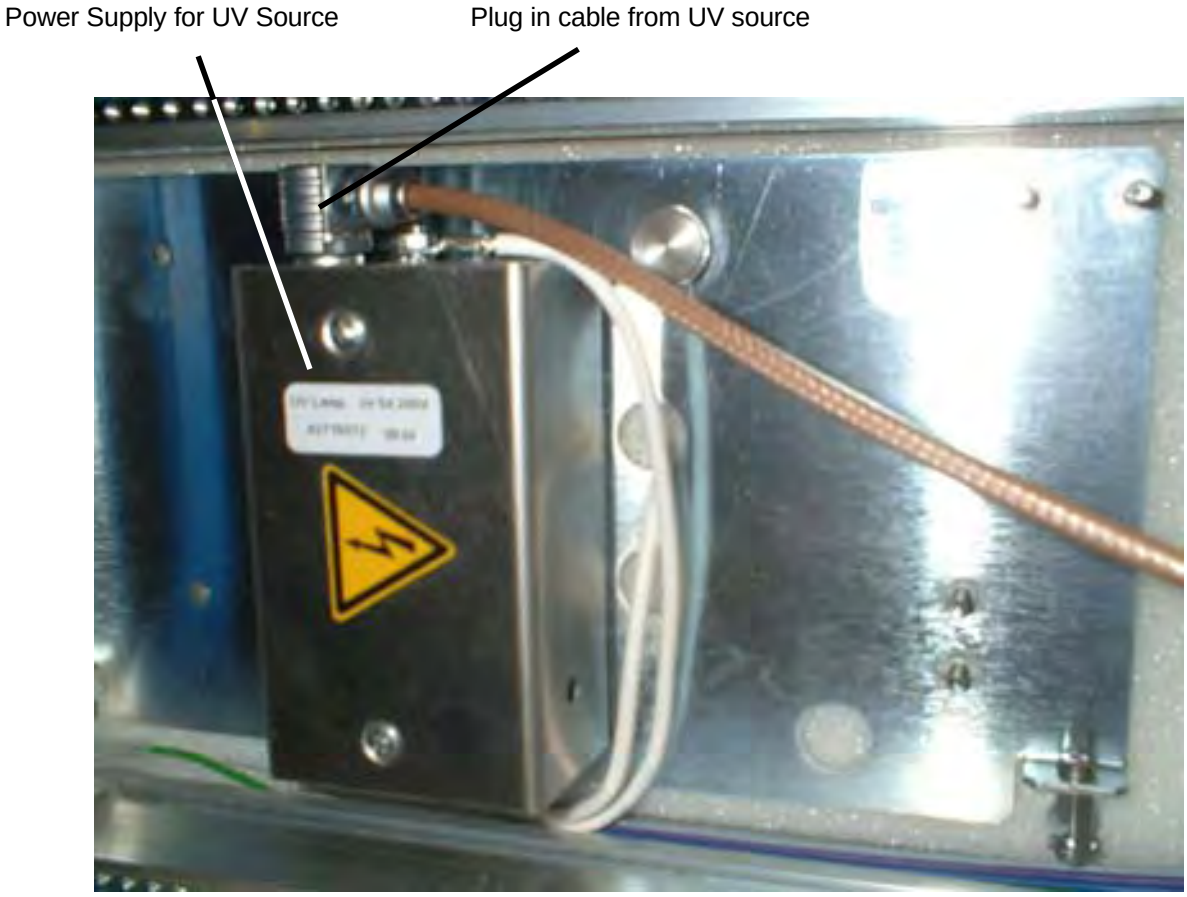

Fig. 12-4a: Power Supply for UV Source *(front view, front panel disassembled)*

Connect the two white grounding cables to the UV source.

- One grounding cable comes from power supply for UV source .
- The 2nd grounding cables comes from PCB ESP10 (part no. 43002530).
- Connect both cables to the UV lamp (connection point) as indicated below.

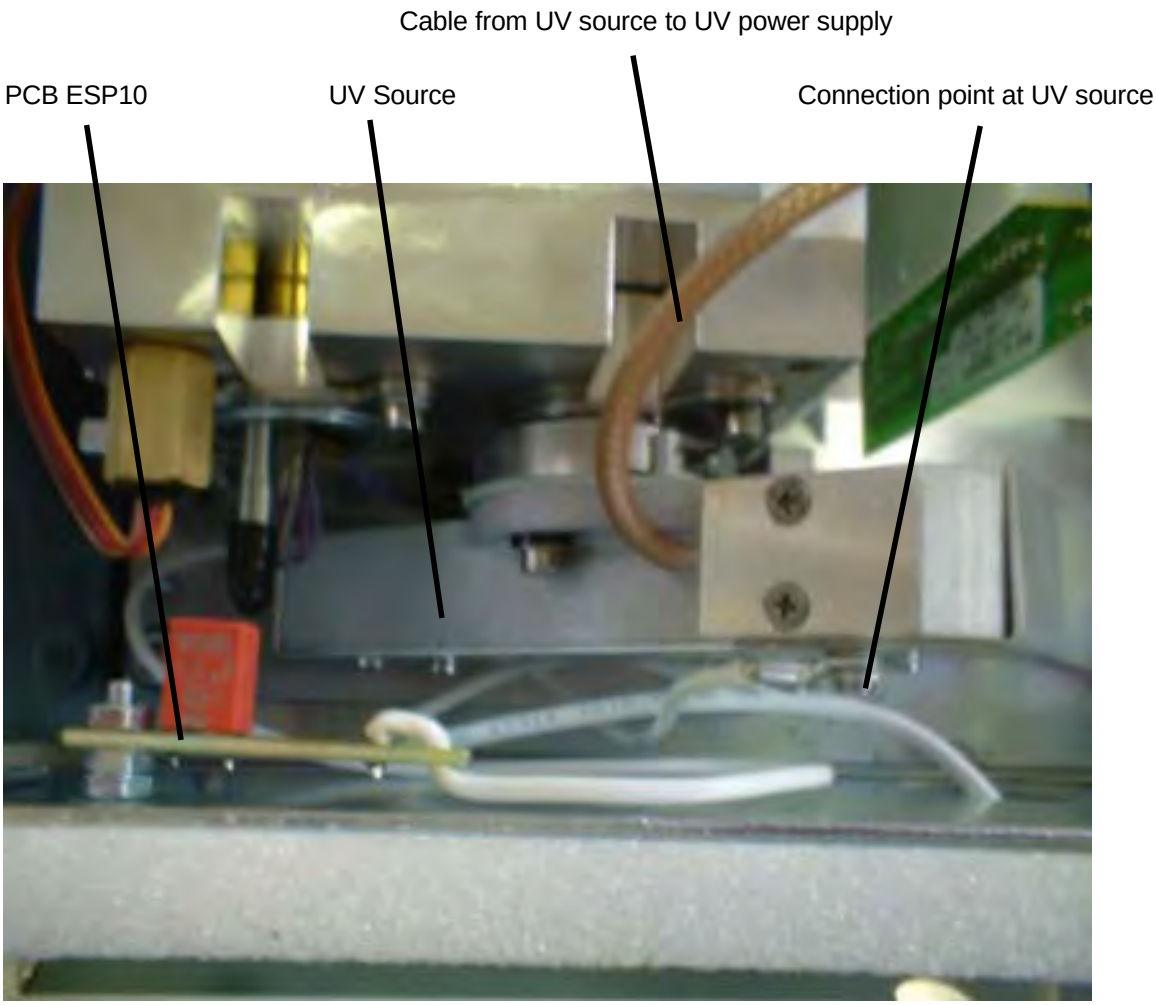

Fig. 12-4b: UV Source and PCB ESP10 *(top view, housing cover disassembled)*

Maintenance

In general only the gas conditionning hardware will require maintenance; the analyzer itself requires very little maintenance.

The following checks are recommended for maintenance of the proper operation of the analyzer.

	Check and adjust zero-level:	weekly
	(MLT 1ULCO / MLT 3 Gas Purity Measurment:	daily)
	Check and adjust span:	weekly
	(MLT 1ULCO / MLT 3 Gas Purity Measurment:	daily)
	Perform leak testing:	6 times annually.

The maintenance frequencies stated above are presented as guidelines only; maintenance operations may be required more or less frequently, depending upon usage and site conditions.

14. Leak Testing

The gas path system should be leak tested at least on a bimonthly basis and after maintenance, replacement or repair of gas path parts.

WARNING

Before opening gas paths they must be purged with ambient air or neutral gas (N_2) to avoid hazards caused by toxic, flammable, explosive or harmful to health sample gas components!

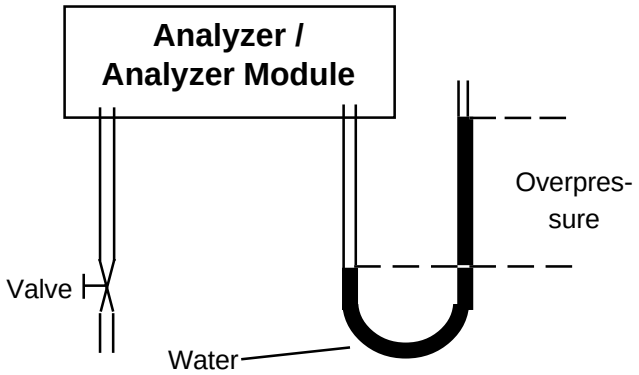

Fig. 14-1: Leak Testing with an U - Tube - Manometer

❍ **Required tools**

- U-turn manometer for max. 500 hPa
- Stop valve

❍ **Procedure**

- Connect the water filled u-turn manometer to the analyzer‘s sample gas output (disconnect external gas lines).
- Install the stop valve between gas input fitting and a Nitrogen (N_2) supply.
- Open the stop valve until the internal gas path is under pressure of approx. 50 hPa (corresponding to 500 mm water column)
- Close the stop valve. After a short time for the water to balance the water level must not change over a time period of approx. 5 minutes!

Note!
It is recommended to include external equipment (e.g. cooler, dust filters, etc.) into a leak test!

Overpressure max. 500 hPa !

For differential measurement the leakage check must be performed for measurement side and reference side separately !

Analyzers with parallel tubing require separate leak tests for each gas path!

15. Opening the Housing

The housing must be opened for checking the electrical connections and for replacement or cleaning of any of the components of the analyzer.
The following sections describe how to open the different analyzer housings provided the instruments are fully accessible, e.g. are taken out of the rack.

WARNING

Before opening gas paths they must be purged with ambient air or neutral gas (N_2) to avoid hazards caused by toxic, flammable, explosive or harmful to health sample gas components!

WARNING

ELECTRICAL SHOCK HAZARD!
Live parts are accessible when working at open instruments!

CAUTION

HIGH TEMPERATURES !
While working at photometers and/or thermostated components inside the analyzers hot components may be accessible!

Take care of the safety instructions as given at the beginning of this manual while working at and inside the instruments!

Working inside the instruments is subject to briefed personnel familiar with potential risks!

15.1 MLT 1

15.1.1 MLT 1 (Platform housing)

15.1.1.1 Housing Cover

- ❍ Disconnect all voltage supplies.
- ❍ Remove analyzer module out of platform (see platform manual).
- ❍ Unscrew the respective fastening screws at both housing sides (Fig. 15-1).
- ❍ For rear cover unscrew the additonal fastening screw at the top of the housing (Fig. 15-1)
- ❍ Remove the respective housing top cover panel.

Repeat above steps in reverse order to assemble the housing

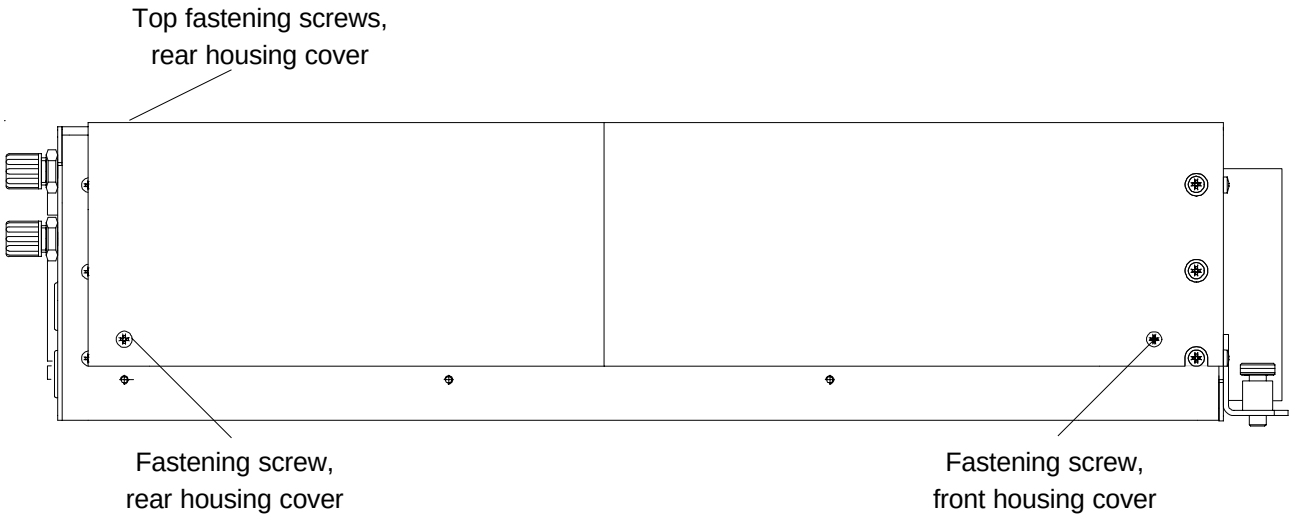

Fig. 15-1: MLT 1 (Plattform housing)
(Fastening screws housing cover)

15.1.1.2 Front Panel

Removing of front panel can be done without removing of housing covers:

- ❍ Disconnect module from power supply.
- ❍ Remove analyzer module out of platform (Item 17.1 of platform manual).
- ❍ Unscrew the 6 fastening screws at both housing sides (Fig. 15-2)
  or
  unscrew the 4 fastening screws at front panel (Fig. 15-2).
- ❍ Remove front panel to the front carefully.

Optionally internal components may be fixed to the front panel, e.g. internal fan, UVS, oxygen sensor, pressure sensor (see fig. 1-7)!

Repeat above steps in reverse order to assemble the housing

Take care not to squeeze internal electrical connections and gas lines when assembling the housing!

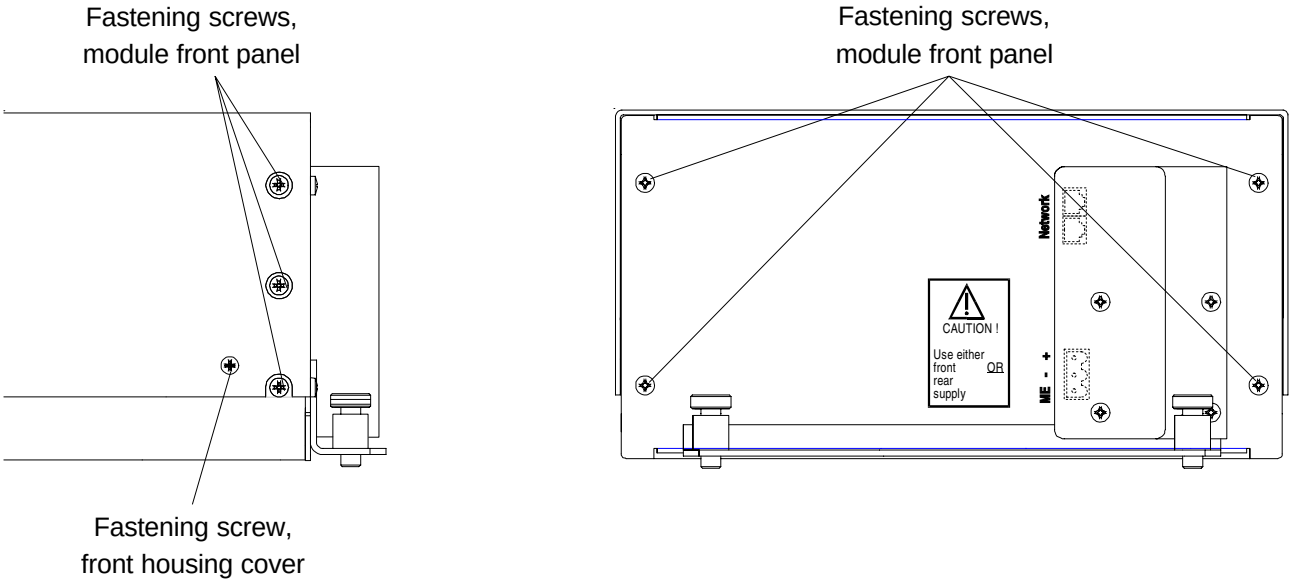

Fig. 15-2: MLT 1 (Plattform housing)
(Fastening screws front panel)

15.1.2 MLT 1 (1/2 19" housing)

15.1.2.1 Housing Cover

- ❍ Disconnect all voltage supplies.
- ❍ Unscrew fastening screws for rack mounting / front frame if necessary (Fig. 1-1).
  Remove analyzer out of rack or remove the front mounting frame and carrying strap to rear.
- ❍ Unscrew the respective fastening screws at both housing sides (Fig. 15-3)
- ❍ Remove the respective housing top cover panel.

Repeat above steps in reverse order to assemble the housing

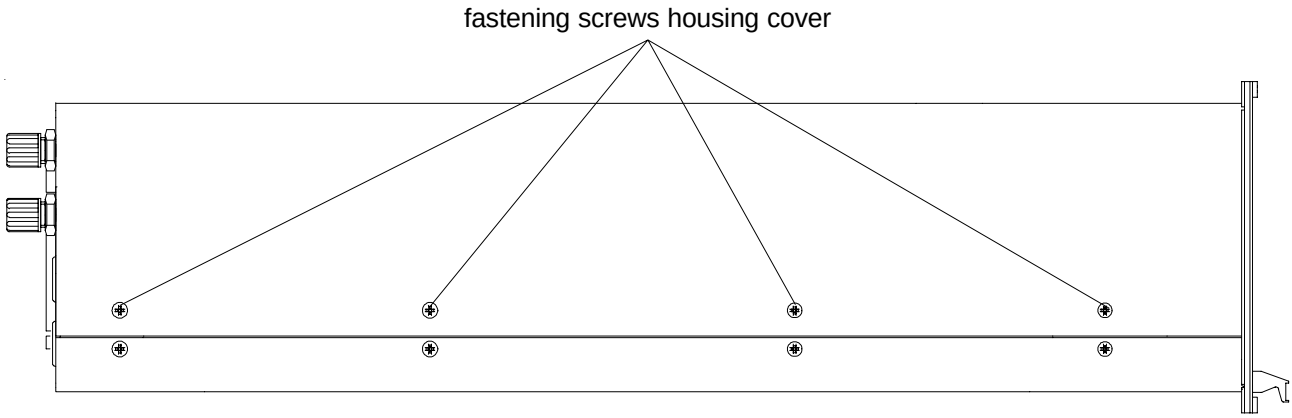

Fig. 15-3: MLT 1 (1/2 19" housing)
(Fastening screws housing cover)

15.1.2.2 Front Panel

- ❍ Opening housing cover (Item 15.2.1).
- ❍ Unscrew the 6 fastening screws at both housing sides (Fig. 15-4)
- ❍ Remove front panel to the front carefully.

Optionally internal components may be fixed to the front panel, e.g. internal fan, UVS, oxygen sensor, pressure sensor (see fig. 1-7)!

Repeat above steps in reverse order to assemble the housing

Take care not to squeeze internal electrical connections and gas lines when assembling the housing!

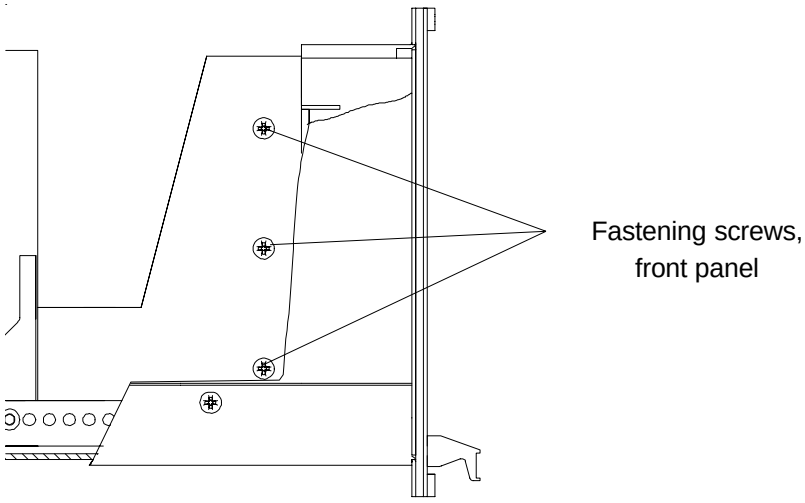

Fig. 15-4: MLT 1 (1/2 19" housing)
(Fastening screws front panel)

15.2 MLT 2 (Field Housing)

WARNING

EXPLOSION HAZARD!

Opening Instruments installed in hazadous areas is permitted only taking into consideration the special conditions for such areas !

Refer to the special instruction manual for operating instruments in hazadous areas to detailled information about handling such equipment !

WARNING

ELECTRICAL SHOCK HAZARD!

Live parts are accessible when working at open instruments!

❍ The front door is closed utilizing 4 sash fasteners (fig. 15-5).
To open use a four-square Allen key shipped together with the instrument and turn the fastener according the markings printed onto the front door.

Note!
For dual compartment housing the described opening procedure is the same for the second housing part!

❍ Lift left side of front panel slightly and open the door to the right side carefully.

❍ Most components are located on a photometer slice carriage which can be pulled out to the front after removing 2 knurled head screws (fig. 15-6). Store the screws on bolts placed nearby the screws. Pulling out the sliding carriage in a first step is possible only to a mechanical stop(fig. 15-6). Push the stop aside to completely pull out the carriage slide of the housing.

Note!
Before taking the slide out of the housing disconnect all electrical and gas path connections!
Be careful when working at photometer components: HOT parts!

Repeat above steps in reverse order to assemble the housing

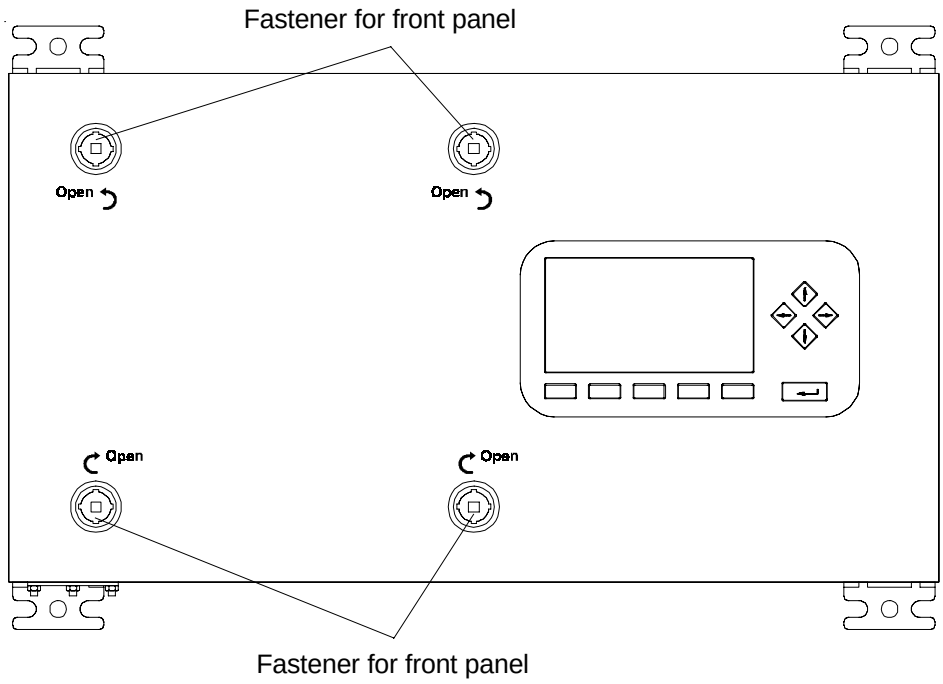

Fig. 15-5: MLT 2 (Field housing) *(fastener for front panel)*

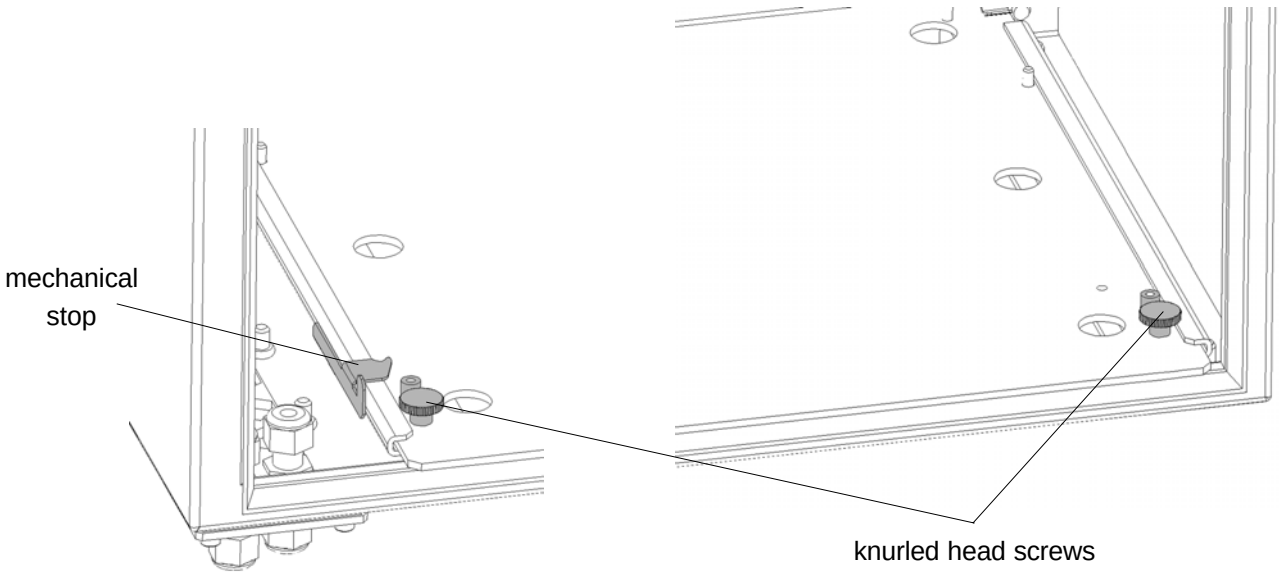

Fig. 15-6: MLT 2, photometer carriage slide

15.3 MLT 3/4 (1/1 19" housing)

❍ Disconnect all voltage supplies.

15.3.1 Housing Cover

❍ Unscrew the 8 fastening screws on top.
Pull the cover straight up.

Repeat above steps in reverse order to assemble the housing

15.3.2 Front Panel (MLT 4 / MLT 3 standard version)

❍ Unscrew the 6 fastening screws (Fig. 15-7)
Remove front panel to the front carefully.

Optionally internal components may be fixed to the front panel, e.g. UVS, oxygen sensor, pressure sensor (see fig. 1-21 and 1-27)!

Repeat above steps in reverse order to assemble the housing

Take care not to squeeze internal electrical connections and gas lines when assembling the housing!

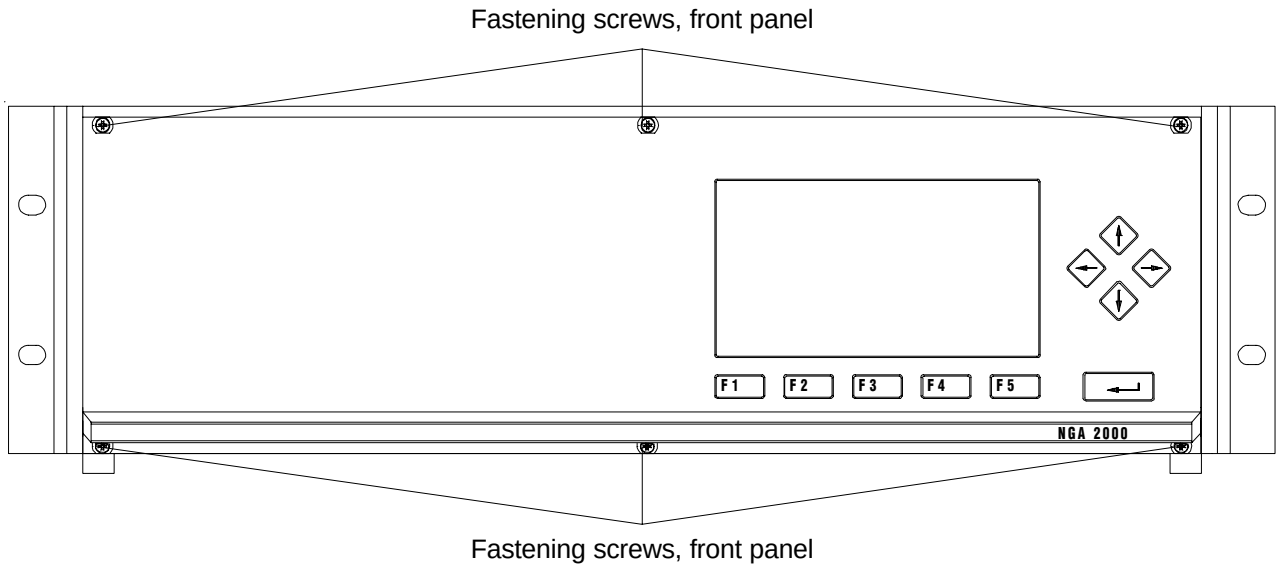

Fig. 15-7: MLT3 (standard version) / MLT 4 (1/1 19" housing)
(Fastening screws front panel)

15.3.3 Front Panel (MLT 3 gas purity measurement)

15.3.3.1 Operation Front Panel

❍ Unscrew the 6 fastening screws (Fig. 15-8)
Remove operation front panel to the front carefully.

15.3.3.2 Left Front Panel

❍ Unscrew the 4 fastening screws (Fig. 15-8).
Remove left front panel to the front carefully.

Gas lines and optionally internal components may be fixed to the front panel (see fig. 1-24)!

Repeat above steps in reverse order to assemble the housing

Take care not to squeeze internal electrical connections and gas lines when assembling the housing!

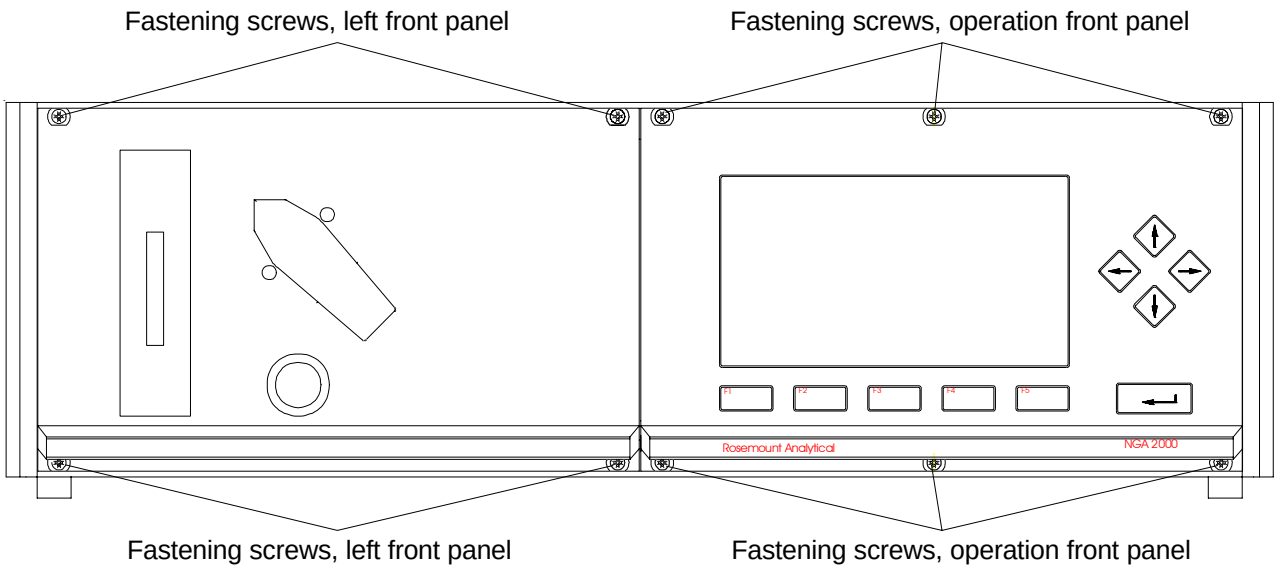

Fig. 15-8: MLT3 (gas purity measurement) (1/1 19" housing)
(Fastening screws front panel)

15.4 CAT 200

WARNING

EXPLOSION HAZARD!

Opening Instruments installed in hazadous areas is permitted only taking into consideration the special conditions for such areas !

Refer to the special instruction manual for operating instruments in hazadous areas to detailled information about handling such equipment !

WARNING

ELECTRICAL SHOCK HAZARD!

Live parts are accessible when working at open instruments!

CAUTION

HEAVY PARTS!

Individual housing components weigh up to 27 kg !

Dome components slip off when reaching end of threat !

Use suitable tools or work in pairs !

The CAT 200 housing consists of two main parts:

- junction box
- dome with extender housing

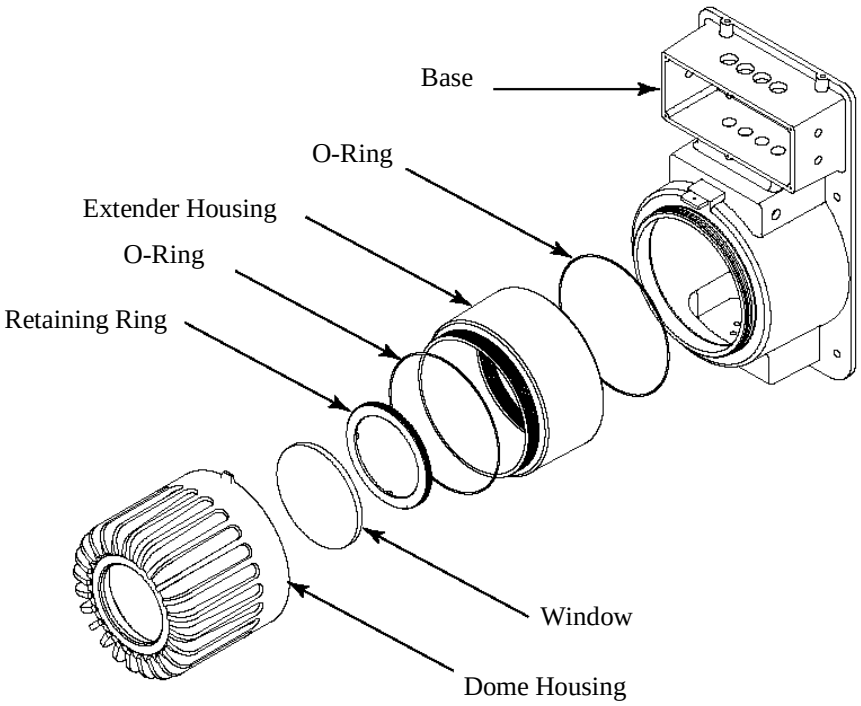

Fig. 15-9: Cat 200 Enclosure Assembly

The junction box contains an encapsulated EMI mains filter and all the terminals for connecting mains supply and signal lines. The dome covers all other components, e.g. power supply unit and analyzer module.

15.4.1 Junction Box

❍ Open the junction box by loosening the 6 Allen screws (fig. 15-10) utilizing the (imperial) Allen key shipped with the instrument.

❍ Remove the cover.

Note!
Assemble the cover utilizing ALL 6 screws to ensure proper IP rating against dust and water!

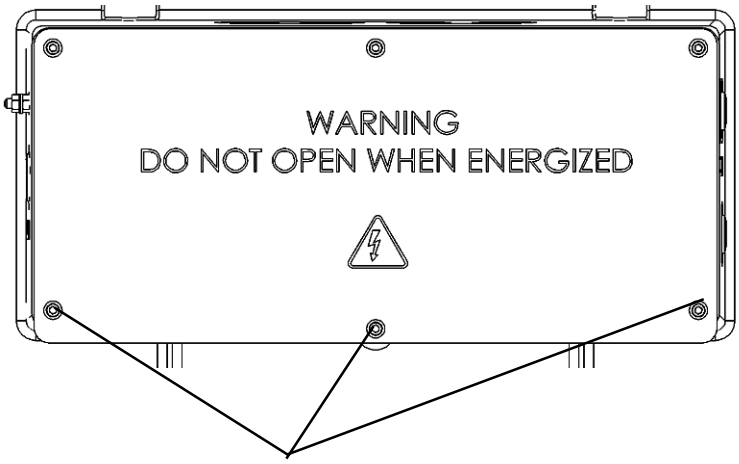

Allen screws
(6 pcs)

Fig. 15-10: Cat 200 Junction box

15.4.2 Dome

To get access to internal components and the analyzer module the dome‘s components have to be removed (fig. 15-11):

- ❍ Loosen the outer screw
- ❍ Turn the dome counterclockwise to remove it
- ❍ Loosen the inner screw
- ❍ Turn the extender ring counterclockwise to remove it

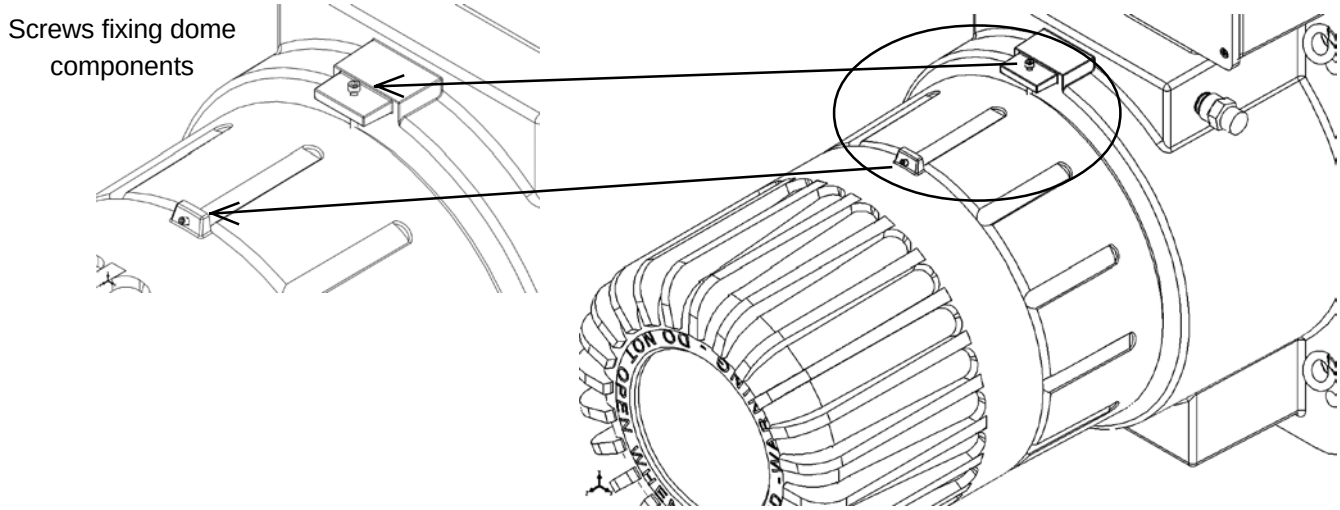

Fig. 15-11: CAT 200 Dome, fixing screws

- ❍ When dome is removed unscrew the knurled head screws at the analyzer module‘s sides (fig. 15-12) and pull it to the front until the last screw locks into the detent (fig. 15-13).

  Note!
  Mark or remember the detent where the first knurled head screw was placed, to place it there again when assembling the unit!
  Otherwise it may happen the analyzer is not magnetically operable any more because the distance between front panel and glass it to great.

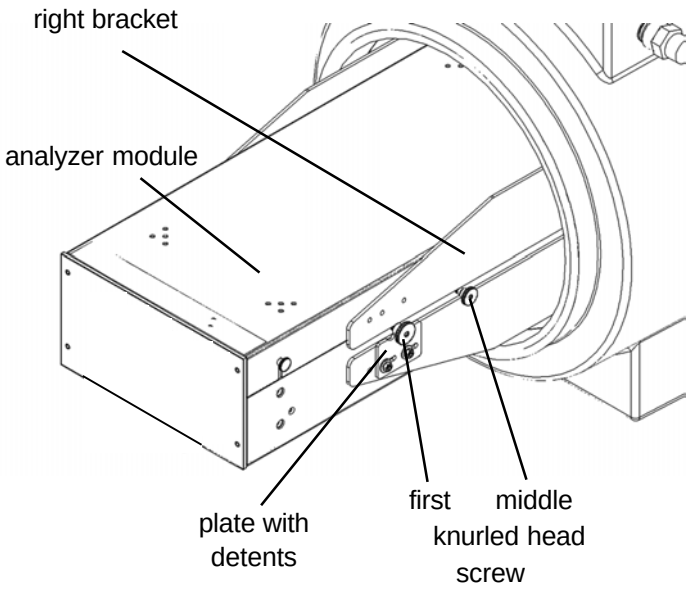

Fig. 15-12: View at analyzer module

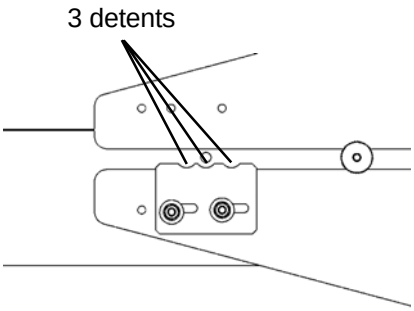

Fig. 15-13: Plate with detents

❍ It‘s now possible to pivot the module downwards and to unscrew three additional knurled head screws to remove the module cover.

Furthermore it is possible to take the module out of the CAT housing after disconnecting all gas path and electrical connections. This gives access to the components installed inside the cast iron housing (fig. 5-14).
The analyzer module used within the CAT 200 is identical to a MLT 1 analyzer, except it is magnetically operated. For this reason see fig. 1-9 to 1-11 when identifying the different components installed within a CAT 200 analyzer module: These figures show several MLT 1 configurations, also valid for the CAT 200 module.

Repeat the steps in reverse order to assemble the housing.

When having assembled the dome perform a first test to ensure the front panel sensor keys can be activated. If all sensor fields are accessible use the screws on top of the dome and extender ring to fix both units (fig. 15-11).
If the sensor fields not accessible, see at section 15.4.3 to adjust the analyzer with magnetically operated front panel.

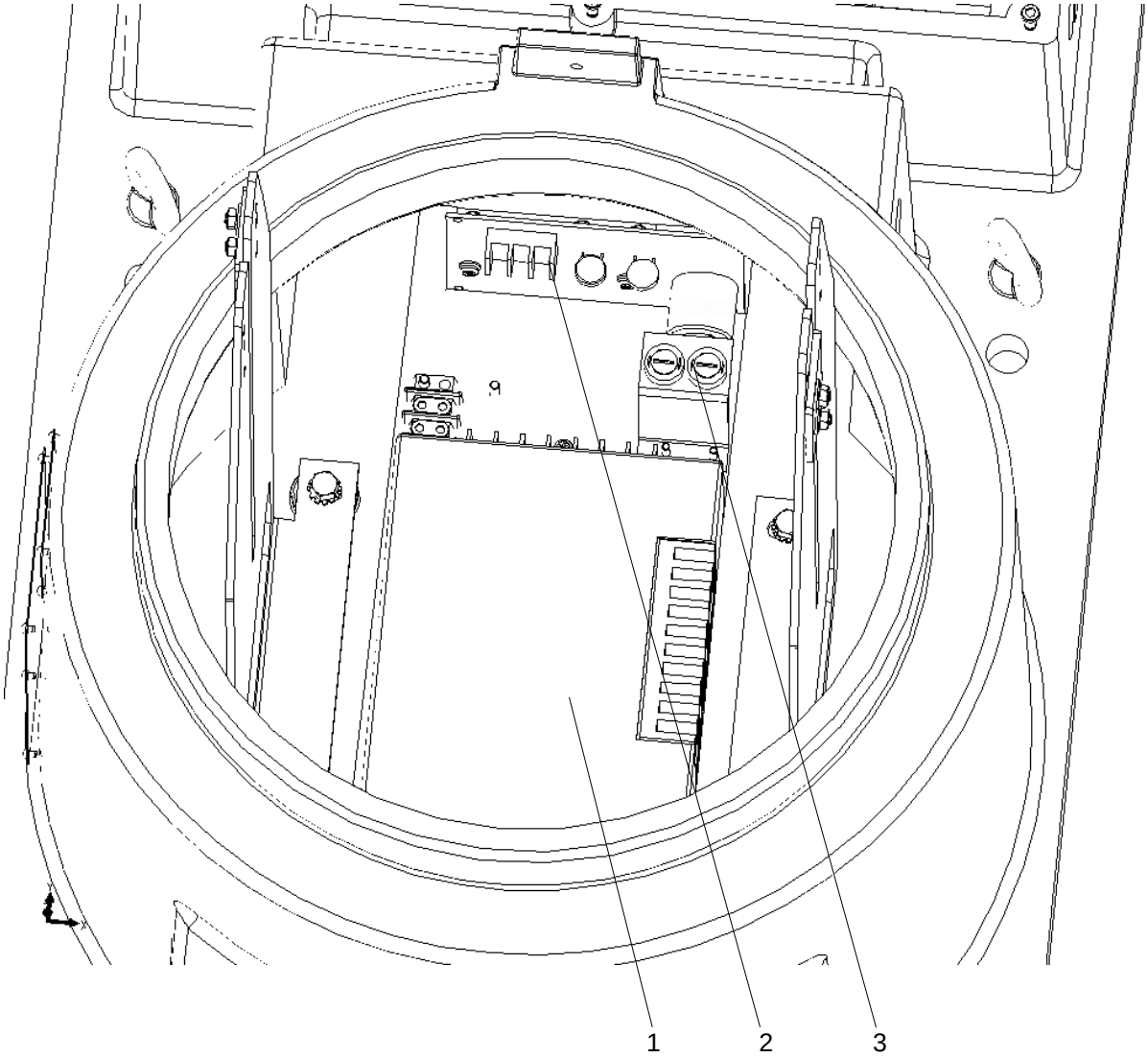

Fig. 15-14: CAT 200,
Cast Iron housing, Interior View

1 Power supply unit
2 Filter pcb
3 Fuses for power supply unit

15.4.3 Magnetically Operated Front Panel

To ensure safe and faultless operation of the touch panel it is required to have the control elements (reed relays) installed within a defined distance from the inner side of the security glass.
If it is necessary to remove the CAT 100 dome for maintenance and/or inspection purposes and to loosen the internal analyzer, the following measures must be followed:

15.4.3.1 Sliding the Analyzer into Position

Set the analyzer module onto the fixture.
Position the dome and fix it turning it clockwise. The inner side of the front glass now should have contact to the analyzers key pad bar and push the analyzer into the CAT housing.
The front of the key pad bar should now have a distance from the inner side of the dome's front glass of between 0 and max. 2 mm (fig. 15-15).
If the distance is bigger, it has to be corrected by repeating the procedure.
Next remove the CAT dome once more.

15.4.3.2 Fixing the Analyzer

Fix the analyzer on the fixture using the screws located at the analyzers left and right side.

15.4.3.3 Completing the Adjustment

Postion the CAT dome and fix it. Make sure the distance is still correct.

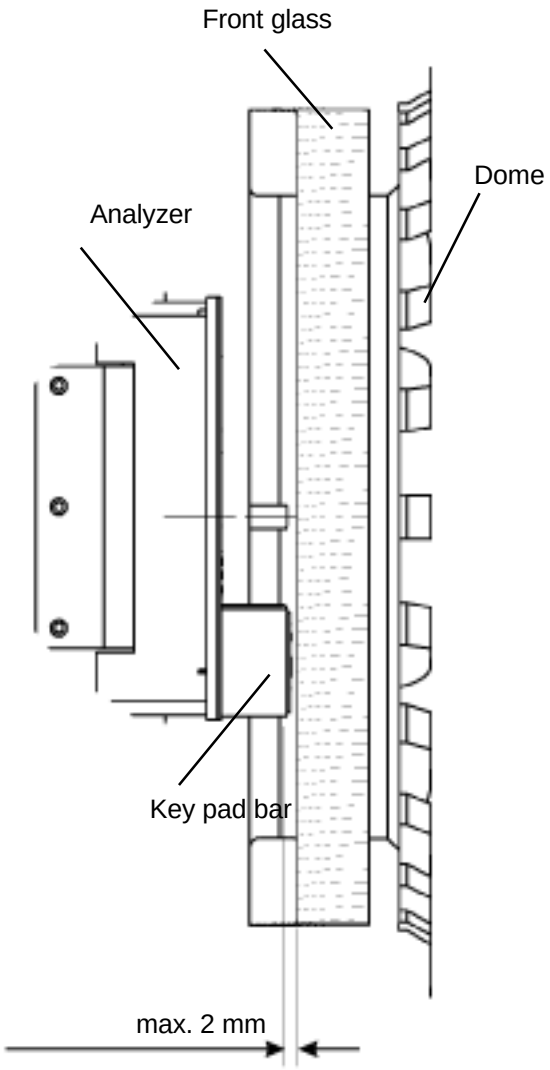

Fig. 15-15: Distance between glass and key pad bar

16. Fine Dust filter (MLT 3 Option)

The filter element of the in MLT 3 optional installed fine dust filter (see Fig. 1-16a) needs to be checked for pollution on a regular basis, depending on the application and to be replaced if need be. If the filter element shows contamination, the element should be immediately replaced with a new unit.

WARNING

Before opening gas paths they must be purged with ambient air or neutral gas (N_2) to avoid hazards caused by toxic, flammable, explosive or harmful to health sample gas components!

CAUTION

HIGH TEMPERATURES !

While working at photometers and/or thermostated components inside the analyzers hot components may be accessible!

- Disconnect all voltage supplies.
- Remove front panel (Item 15.3.2).
- Removal of filter holder.
- Replace the filter element by a new clean element (Order - No.: 42 707 676).

Filter elements are consumables!
Never try to clean polluted elements! Use only new original spare parts for replacing polluted elements!
Dispose polluted filter elements taking into account the local legislation!

- Reinstall filter holder.
- Perform a leak testing (see Item 14.).
- Close front panel (Item 15.3.2).

17. Replacement and Cleaning of Photometric Components

The housing has to be opened for checking the electrical connections and for replacement or cleaning of any of the components of the equipment.

WARNING

Before opening gas paths they must be purged with ambient air or neutral gas (N_2) to avoid hazards caused by toxic, flammable, explosive or harmful to health sample gas components!

WARNING

ELECTRICAL SHOCK HAZARD!

Live parts are accessible when working at open instruments!

CAUTION

HIGH TEMPERATURES !

While working at photometers and/or thermostated components inside the analyzers hot components may be accessible!

CAUTION

The electronic parts of the analyzer can be irreparably damaged if exposed to electrostatic discharge (ESD).

Take care to follow all safety measures against ESD when handling pcb and/or inside analyzer housing !

CAUTION

Tampering with or unauthorized substitution of components may adversely affect the safety of this instrument. Use only factory approved components for repair.

Because of the danger of introducing additional hazards, do not perform any unauthorized modification to this instrument!

Take care of the safety instructions as given at the beginning of this manual while working at and inside the instruments!

Working inside the instruments is subject to briefed personnel familiar with potential risks!

17.1 Removal of the Photometer Assembly

- Open the housing (cf. Section 15).
- Disconnect all electrical connections between photometer assembly and electronic unit (PCB PIC) and remove all gas lines from the photometer assembly if necessary.
- Unscrew both the hexagonal screws shown in Fig. 17-1.
- Remove the photometer assembly to top of analyzer housing as a unit.

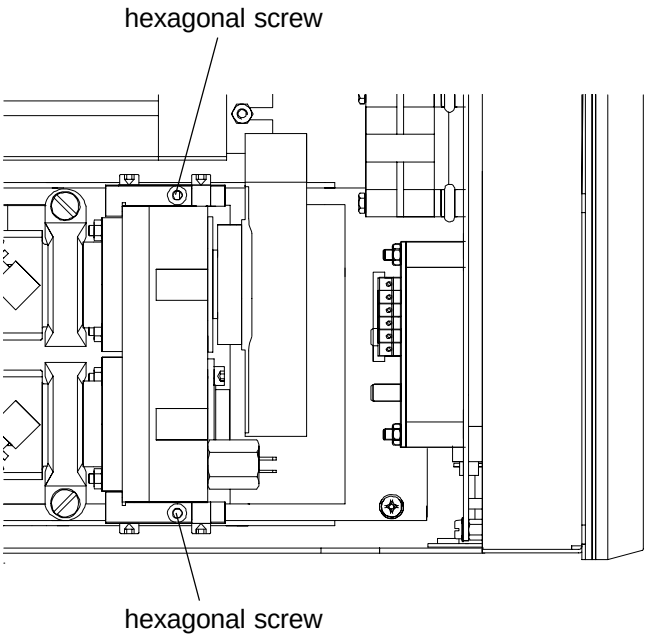

Fig. 17-1: Photometer Assembly, example
(Top view, detail)

17.2 Light Source Replacement (IR)

- ❍ Open the housing (cf. Section 15).
- ❍ Remove the photometer assembly out of analyzer housing (see Section 17.1).
- ❍ Remove the two light source hexagonal mounting screws (shown in Fig. 17-2 as Item 1).
- ❍ Remove the light source together with its mounting flange.
- ❍ Remove the mounting flange from the light source and position it on the new light source.
- ❍ Insert the new light source and flange in the same position as the old one.
- ❍ Insert and tighten the two light source hexagonal mounting screws (Fig. 17-2).

Then:

- ❍ Replace the photometer assembly (see Section 17.4).
- ❍ Perform the physical zeroing procedure (see Section 17.5).

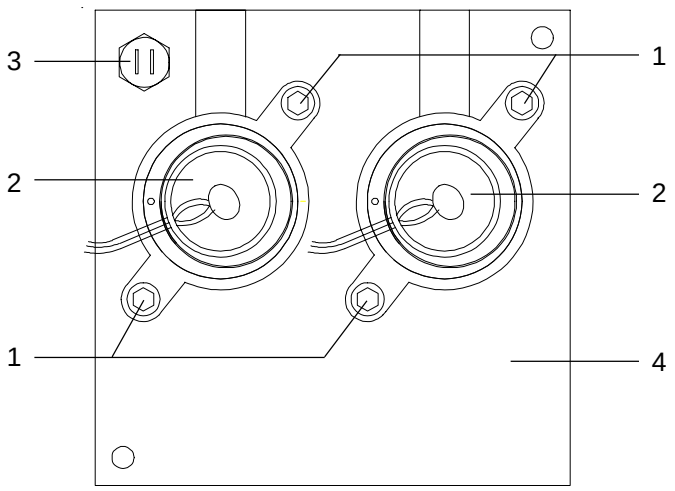

Fig. 17-2: Chopper Housing with IR light sources

1 Light source hexagonal mounting screw
2 Light source with mounting flange
3 Temperature sensor (older versions)
4 Chopper Housing

17.3 Cleaning of Analysis Cells and Windows

17.3.1 Removal of Analysis Cells

❍ Open the housing (cf. Section 15).

❍ Remove the photometer assembly out of analyzer housing (see Section 17.1).

a) For analysis cells of lengths 1 mm to 10 mm

- ❍ Remove the clamp (Fig. 17-3, Item 1).
- ❍ Remove the clamping collars and the filter cell with signal detector assembly.

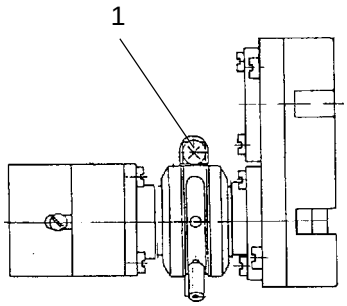

Fig. 17-3: Photometer Assembly *(1 mm to 10 mm analysisi cells)*

b) For analysis cells of lengths 30 mm to 200 mm:

- ❍ Remove the clamp shown in Fig. 17-4 as Item 1.
- ❍ Remove the filter cell with signal detector assembly.
- ❍ Remove the clamp shown in Fig. 17-4 as Item 2.
- ❍ Remove the analysis cell body from the filter cell (chopper housing).

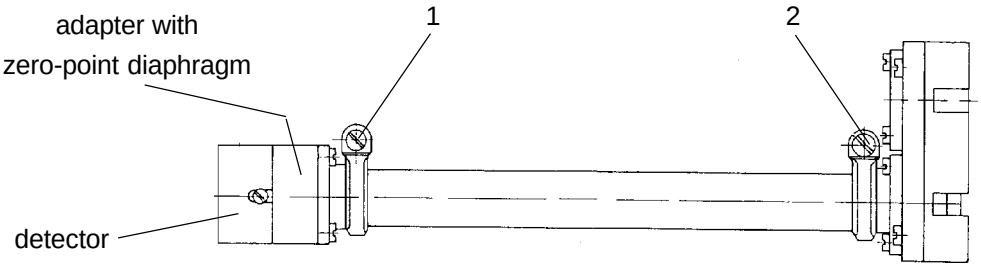

Fig. 17-4: Photometer Assembly *(30 mm to 200 mm analysisi cells)*

17.3.2 Cleaning

a) Windows

The shielding windows (on the filter cells, chopper housing and the analysis cell) may be cleaned with a soft, fluff free cloth.

Use a highly volatile alcohol for the cleaning procedure.

To remove any lint and dust particles remaining, blow off the cleaned components with nitrogen (N_2).

b) non-divided analysis cells

The analysis cell may be cleaned with a soft, fluff free cloth.

Use a highly volatile alcohol for the cleaning procedure.

To remove any lint and dust particles remaining, blow off analysis cell with nitrogen (N_2).

c) divided analysis cells

If deposits are visible in the analysis cell, these can be removed with suitable solvents e. g. acetone or spirit. Then the analysis cell is to be flushed with an alcohol which evaporates easily and dried by blowing nitrogen (N_2).

Maxi. pressure in analysis cell 1.500 hPa !

17.3.3 Reinstalling of Analysis Cells

a) For analysis cells of lengths 1 mm and 7 mm

- ❍ Place the O - rings on the filter cells.
- ❍ Fit the components together and fix with the clamping collars.
- ❍ Install the clamp (Fig. 17-3, Item 1) and tighten.

b) Analysis cells of lengths 50 mm - 200 mm:

- ❍ Place the O - ring on the chopper housing side of the cell body.
- ❍ Position the cell body in place and fasten using the clamp shown in Fig. 17-4 as Item 2.
- ❍ Place the O - ring on the filter cell (with detector).
- ❍ Fit the filter cell on the cell body.
- ❍ Install the clamp shown in Fig. 17-4 as Item 1 and tighten.

Then:

- ❍ Replace the photometer assembly (see Section 17.4).

17.4 Reinstalling of the Photometer Assembly

- Insert the photometer assembly into the analyzer housing and fasten in position using the hexagonal screws shown in Fig. 17-1.
- Reconnect all gas lines to the assembly.
- Reconnect all electrical connections between the photometer assembly and the electronic unit PCB PIC (see Section 1.9.4).
- Perform a leakage test (see Section 14).
- Perform the physical zeroing procedure (see Section 17.5).

17.5 Physical Zeroing

Adjustment of the physical zero - level will only be required if a light source, a filter cell, or an analysis cell have been replaced or repositionned.

Needed for the adjustment is a 3 mm hexagon wrench SW 3.

- ❍ Switch on the analyzer (cf. Section 6.).
- ❍ Admit zero gas to the instrument.
- ❍ Slightly loosen the light source mounting screws (shown in Fig. 17-2 as Item 1) for correspondend channel.
- ❍ Set the raw signal [(press "Status" (F2) → "RawMeas." (F2)] precisely to ± 100.000 counts by turning the corresponding light source.
- ❍ Tighten the light source mounting screws (shown in Fig. 17-2 as Item 1) for correspondend channel.

If the turning of the light source is not sufficient, the zero point can be adjusted by sliding the zero point diaphragm at the downer side of the detectors adapter (Fig. 17-4).

When the physical zeroing has been correctly set, perform an electrical zeroing (see software manual).

18. Check / Replacement of electrochemical Oxygen Sensor

WARNING

Before opening gas paths they must be purged with ambient air or neutral gas (N_2) to avoid hazards caused by toxic, flammable, explosive or harmful to health sample gas components!

WARNING

CAUSTIC !

The electrochemical O_2-sensor contains electrolyte which is caustic and can cause serious burns to skin. Do not ingest contents of sensor !

CAUTION

The electronic parts of the analyzer can be irreparably damaged if exposed to electrostatic discharge (ESD).

Take care to follow all safety measures against ESD when handling pcb and/or inside analyzer housing !

CAUTION

Tampering with or unauthorized substitution of components may adversely affect the safety of this instrument. Use only factory approved components for repair.

Because of the danger of introducing additional hazards, do not perform any unauthorized modification to this instrument!

Take care of the safety instructions as given at the beginning of this manual while working at and inside the instruments!

Working inside the instruments is subject to briefed personnel familiar with potential risks!

18.1 EO_2-Sensor

Through measuring principle the oxygen sensor will have only a limited life time.

The life time of the oxygen sensor is dependent on the sensor itself and on the measured oxygen concentration and is calculated as follows:

$$\text{life time} = \frac{\text{sensor time (hours)}}{O_2 \text{ concentration (\%)}}$$

The so-called “sensor time” (operation without oxygen at 20 °C) is

approx. 900.000 hours for sensor with a response time of about 12 s

The sensors will have the following life time at approx. 21 % Oxygen and 20 °C :

approx. 42.857 hours (approx. 5 years) for sensor with a response time of about 12 s

Note !
The given values are for reference only! The expected lifetime is greatly affected by the temperature of the environment in which the sensor is used or stored. Increases or decreases in atmospheric pressure have the same effect as that by increases or decreases in Oxygen concentration. (Operation at 40 °C halves lifetime)..

Note !
Depending on measuring principle the electrochemical EO_2 cell needs a minimum internal consumption of oxygen (residual humidity avoids drying of the cell). Admit cells continuously with sample gas of low grade oxygen concentration or with oxygenfree sample gas could result a reversible detuning of O_2 sensitivity. The output signal will become instabil.
For correct measurement the cells have to admit with a O_2 concentration of at least 0.1 Vol.-%.
We recommend to use the cells in intervall measurement [purge cells with conditioned (dust removal but no drying) ambient air at measurement breaks].
If it is necessary to interrupt oxygen supply for several hours or days, the cell have to regenerate (supply cell for about one day with ambient air). Temporary flushing with nitrogen (N_2) for less than 1 h (e.g. analyzer zeroing) will have no influence to measuring value.
All analyzers with electrochemical EO_2 cell have to be purged with conditioned ambient air prior to disconnect the gas lines ! Then the gas line fittings have to be closed for transport or depositing analyzer.

18.2 Check of the EO_2-Sensor

Exchange the sensor, if the voltage is less than 70 % of the initially output voltage.

The check requires a digital voltmeter (DVM) with a range of 2 V DC.

- ❍ Remove front panel (see 15.).
- ❍ Switch On the analyzer (see Section 6.).
- ❍ Admit ambient air to the analyzer (approx. 21 Vol. - O_2).
- ❍ Connect the DVM to the measuring points

  Tp 1 (Signal) and Tp 2 (⊥) of the PCB OXS, mounted directly at the connection block (Fig. 18-1, see also Fig. 18-2, 1-3, 1-16a and 1-17).

  The measuring signal should be into a range of 700 mV DC to 1000 mV DC.

Note !
If the measuring value is lower than 700 mV at gas flow with ambient air, the sensor is consumed. Exchange the sensor.

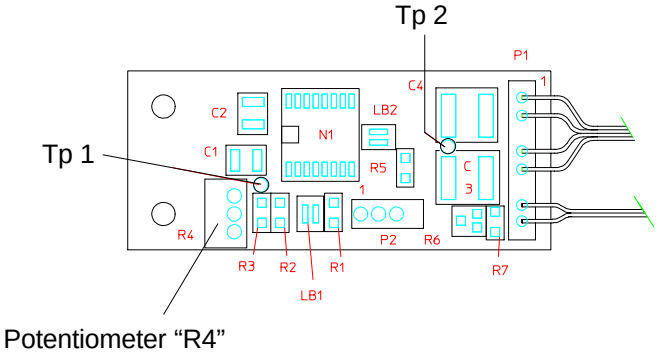

Fig. 18-1: PCB “OXS”, assembled, horizontal projection

18.3 Replacement of the EO_2-Sensor

18.3.1 Removal of the EO_2-Sensor

❍ Remove front panel (see Item 15.).

❍ MLT 1 only:
Remove the fastening hexagon nuts of the connection block (Fig. 18-2) with hexagon spanner (SW 5.5) and remove connection block including oxygen sensor from front panel.

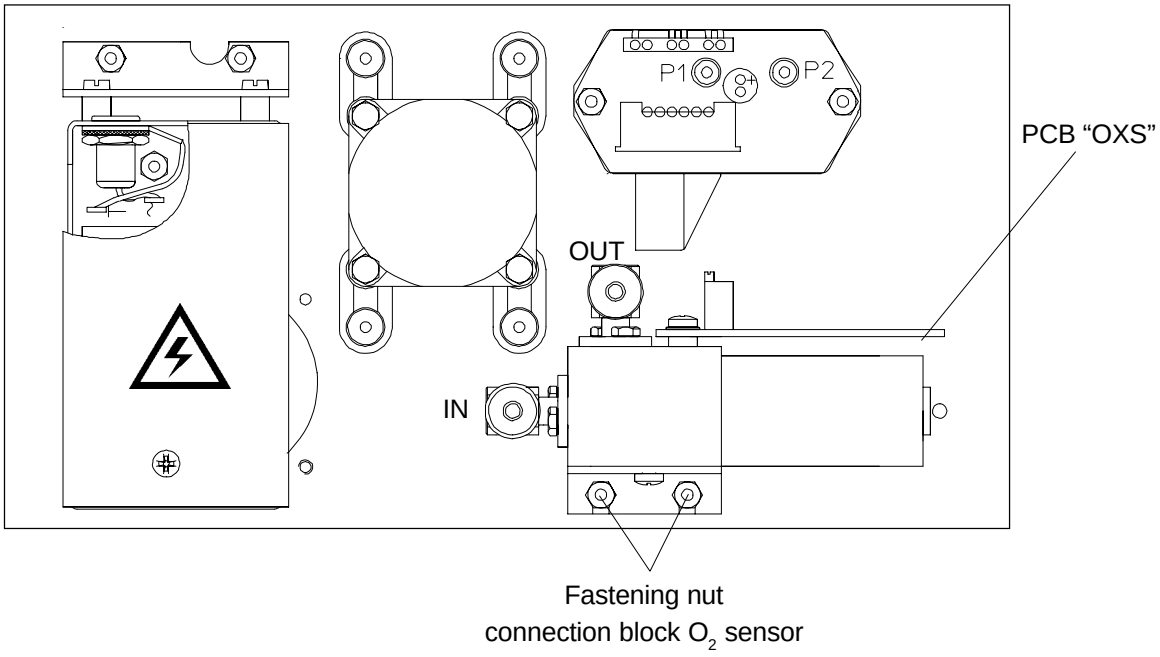

Fig. 18-2: MLT 1, front panel, rear view

18.3.2 Replacing the EO_2-Sensor

- Disconnect the connector for the sensor from “P2” of circuit board “OXS” (see Fig. 18-3).
- Take the consumed sensor out of the fitting.
- Take off the stopper from new sensor and fit in the new sensor into the fitting, so that the name plate is at the top of the sensor.
- Connect the connector for the sensor to “P2” of circuit board “OXS” (see Fig. 18-3).
- Close the spent sensor with the stopper and dispose in accordance with respective legislation or send it to our factory alternatively.

18.3.3 Reinstalling of the EO_2-Sensor

- MLT 1 only:
  Put connection block with the (new) sensor onto the front panel and srew the fastening hexagon nuts of the connection block (Fig. 18-2) with hexagon spanner (SW 5.5).
- Perform a leakage test (see Section 14.) and set the sensor (see Section 18.2.4).

18.3.4 Basic conditions for the EO_2-Sensor

❍ Admit ambient air for the analyzer (approx. 21 Vol. - O_2) and switch on (see Section 6.).

❍ Connect the DVM to the measuring points

Tp 1 (Signal) and Tp 2 (⊥) of the PCB OXS, mounted directly at the sensor block (Fig. 18-1, see also Fig. 18-2, 1-3, 1-16a and 1-17).

❍ Set the signal to 1000 mV DC (± 5 mV) with potentiometer R4 (Fig. 18-3) of the corresponding circuit board “OXS”.

Note !
It is not allowed to change this setting for this sensor again !

❍ Switch off the analyzer and close the analyzer housing (see 15.).
Built-in the module into platform if necessary.

❍ A complete re-calibration of the instrument must be performed after a sensor - replacement.

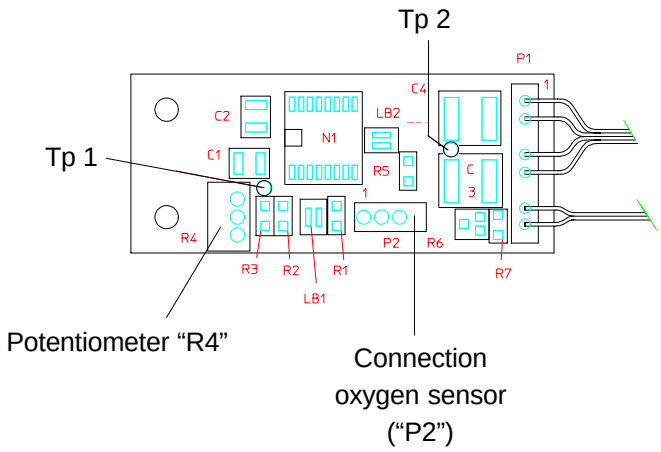

Fig. 18-3: PCB “OXS”, assembled, horizontal projection

18.4 TEO_2-Sensor

The TEO_2 cell is a fuel cell which measures oxygen concentration by oxidizing a lead oxide. The electrical charge per oxidation cycle yields a current directly proportional to the oxygen concentration. This is current is measured, calibrated and displayed. The over all reduction capacity of the cell gives a limited lifetime of the cell.
Under normal operation conditions (low levels of O_2) the lifetime exceeds 6 months. At elevated concentrations however the lifetime decreases. At end of life the cell has to be replaced by a spare part.

- ❍ Switch analyzer to its “purging/zero gas mode” via analyzers operating front panel keys (see Software Manual).

- ❍ Remove the cover and the screws on top of the cell.

WARNING

CAUSTIC !

The electrochemical O_2-sensor contains electrolyte which is caustic and can cause serious burns to skin. Do not ingest contents of sensor !

- ❍ Remove existing sensor and dispose of in accordance with national, federal, state, and local regulations.

- ❍ Inspect inside of cellblock for signs of residual liquid or deposits on the contact pins.
  If liquid is present, use appropriate protective equipment. Deposits on the contact pins can be removed by wiping with a damp cloth or using the eraser from a pencil. Do not use abrasives (i.e. sandpaper) as this will damage the contact pins.

- ❍ Control the O-rings. If they have any damages replace them.

- ❍ Unpack the replacement sensor and remove the short circuit plug from the new cell.

- ❍ Push the new cell in the o-ring holder of the housing lid
  (the contact side to the lid, the gas diaphragm side to the bottom of the cell housing).

❍ Place the lid on the housing, fasten the screws and close the cover.

Purge gas paths with inert gas (nitrogen (N_2)) or sample gas as soon as possible to avoid prolonged exposure of the sensor to high concentrations of oxygen.

The longer the sensor is exposed to air, the longer it will take for the sensor to recover to low ppm levels. When installing a new sensor or starting the instrument for the first time, it may take as long as eight hours for the analyzer to purge down to the lowest operating range.

Prolonged exposure of the sensor to air can cause extended start up time, reduction of performance or damage to the sensor.

❍ Perform adjustment of sensor (chapter 7.)

Notes for analyzers with electrochemical TEO_2 cell!

For TEO_2 sensor please note that the gas inlet and outlet connections of the analyzer are sealed to prevent exposure of the sensor to air.
Prolonged exposure of the sensor to air can cause extended start up time, reduction of performance or damage to the sensor. Do not remove the sealing caps until all associated sample handling components are installed and the instrument is fully ready for installation.

After replacement purge gas paths with inert gas (nitrogen (N_2)) or sample gas as soon as possible to avoid prolonged exposure of the sensor to high concentrations of oxygen.
The longer the sensor is exposed to air, the longer it will take for the sensor to recover to low ppm levels. When installing a new sensor or starting the instrument for the first time, it may take as long as eight hours for the analyzer to purge down to the lowest operating range.
Prolonged exposure of the sensor to air can cause extended start up time, reduction of performance or damage to the sensor.

After initial startup or startup following a prolonged shutdown, the analyzer may require extended time to recover to the range of measurement. Commonly, this is caused by the introduction of ambient air into the sample and/or vent lines to the sensor. The presence of higher than normal levels of oxygen at the sensor will cause the sensor electrolyte to become saturated with dissolved oxygen. When the instrument is placed in operation, the sensor must now consume all excess dissolved oxygen above the desired measuring level.

All analyzers with electrochemical TEO_2 cell have to be purged with inert gas (Nitrogen, N_2) prior to disconnect the gas lines ! Then the gas line fittings have to be closed for transport or depositing analyzer.

19. Cleaning of Housing Outside

Use a liquid general purpose detergent and a lint-free cloth for cleaning the analyzer´s outside.

Procedure

❍ Disconnect instrument from mains!

WARNING

Before opening gas paths they must be purged with ambient air or neutral gas (N_2) to avoid hazards caused by toxic, flammable, explosive or harmful to health sample gas components!

If opening the gas paths is required seal the open analyzer´s gas fittings utilizing PVC caps to avoid pollution of inner gas path.

❍ Moisten the lint-free cloth with a mixture of 3 parts of water and 1 part of the general purpose detergent.

Do NOT drench the cloth, just moisten it to avoid liquid entering the housing!

❍ Clean the analyzer housing outside with the moistend cloth

❍ If required dry the housing after cleaning

20. Technical Data

Certifications (for measurment of not flammable gases or not explosive gases resp. (< 50 % LEL). Bigger concentrations requires supplementary protective measures !)	CE EN 61326, EN 61010-1 NAMUR, CSA-C/US*), C-Tick, PAC, BRML GOSST: VNIIMS, Pattern (Belarussia) *) MLT 2-NF ("Non-Flammable sample only"): USA: Class I, Zone 2, Ex p II T4 Canada: AEx p II T4
PCB EXI 01	EC TYPE-EXAMINATION CERTIFICATION TUEV Nord report No.: 98 ATEX 1341 X
FDA Test: 0-10 ppm CO (MLT1/3)	TUEV Nord report No.: 98 CU 012
Suitability tests (MCERTS/TUEV/QAL 1):	$CO/NO/NO_2/SO_2/O_2$ measurement
936/806017/A&D (MLT 1/ 2)	TI Air, 13th BImSchV
936/806017/B&E (MLT 2/ 3 / 4)	TI Air, 13th BImSchV, 17th BImSchV
- MLT 1	Sira MC 050051/00
- MLT 2	Sira MC 050052/01
- MLT 3/ MLT 4	Sira MC 050053/01
- MLT 1/ MLT 2	QAL 1 (EN 14181, EN ISO 14956)
- MLT 2/ MLT 3/ MLT 4	QAL 1 (EN 14181, EN ISO 14956)
20.1 Housing	see dimensionsl skteches (Fig. 20-1 to 20-8)
Gas connections:	Standard 6/4 mm PVDF
- Sample gas	Option: 6/4 mm or 1/4", ss
- Reference gas	MLT 1 max. 8 fittings
- Purge gas	MLT 2 max. 6 fittings
	MLT 3 max. 4 fittings
	MLT 4 max. 6 fittings
CAT 200	max. 11 fittings
Weight (depending on configuration)	
MLT 1	approx. 8 - 13 kg
MLT 2 (standard version)	approx. 30 - 35 kg
MLT 3/4	approx. 13 - 18 kg
CAT 200	approx. 55 - 70 kg

Protection class	(according to DIN standard 40050)
MLT 1/3/4	IP 20
MLT 2	IP 65 (NEMA4/4X)
CAT 200	IP 55 (IP 66 w/o breather), optional with internal tropicalization
Data line & main line glands	EEx e II KEMA, cable diameter 7 to 12 mm
Permissible ambient temperature (operation):	
- MLT 1/ MLT 2/ MLT 3/ MLT 4	+ 5 to + 40 °C (45 °C as option, not EO_2)
- CAT 200	0 to 50 °C; -30°C (GP & CSA-C/US only)
Permissible storage temperature	- 20 °C to + 70 °C
Humidity (non condensing)	< 90 % rel. humidity at + 20 °C < 70 % rel. humidity at + 40 °C
Rain / Drop and splash water	The MLT must not be exposed to rain or drop/splash water
Explosive atmosphere	The MLT must not be operated in explosive atmosphere without supplementary protective measures
Ventilation	Free flow of air into and out of the MLT (ventilation slits) must not be hindered by nearby objects or walls !
Altitude	0-2000 m (above sea level)

20.2 Options

Pressure sensor	Measuring range 800 - 1,100 hPa
Fine dust filter (MLT 3)	Filter material PTFE, Pore size approx. 2 µm
Sample gas pump (MLT 3)	Pumping rate max. 2.5 l/min. Suction pressure min. 900 hPa For mobile application of MLT only ! Lifetime max. 5,000 running hours !

20.3 General Specifications

Measuring components	see order confirmation
Measuring ranges	
NDIR/VIS/UV	see order confirmation
paramagnetic oxygen sensor (PO_2)	0 - 5 % to 0 - 100 % O_2 or 0 - 2 % to 0 - 25 % O_2 0 - 1 % to 0 - 10 % O_2 *)
electrochemical oxygen sensor (EO_2)	0 - 5 % O_2 to 0 - 25 % O_2 **)
trace electrochemical oxygen sensor (TEO_2)	0 - 100 ppm O_2 to 0 - 5,000 ppm O_2 ***)
thermal conductivity sensor (TC)	0 - 2 % to 0 - 100 % H_2 0 - 1 % H_2 *) 0 - 50 % to 0 - 100 % Ar 0 - 30 % to 0 - 100 % CO_2 0 - 10 % to 0 - 100 % He

*) non standard specifications
**) higher measuring ranges reduce sensor lifetime
***) lower measuring ranges on request (c.f.)

Specifications of MLT:

Table 20-1	NDIR / VIS / UV	Oxygen Sensor (PO_2 and EO_2)	Thermal Conductivity (TC)
Detection limit	≤ 1 % [1) 4)]	≤ 1 % [1) 4)]	≤ 2 % [1) 4)]
Linearity	≤ 1 % [1) 4)]	≤ 1 % [1) 4)]	≤ 1 % [1) 4)]
Zero-point drift	≤ 2 % per week [1) 4)]	≤ 2 % per week [1) 4)]	≤ 2 % per week [1) 4)]
Span (sensitivity) drift	≤ 0.5 % per week [1) 4)]	≤ 1 % per week [1)]	≤ 1 % per week [1) 4)]
Repeatability	≤ 1 % [1) 4)]	≤ 1 % [1) 4)]	≤ 1 % [1) 4)]
Response time (t_{90})	3 s ≤ t_{90} ≤ 7 s [3) 5)]	< 4 s (increasing) [3) 6)] < 5 s (decreasing) [3) 6)] approx. 12 s [3) 13)]	3 s ≤ t_{90} ≤ 20 s [3) 7)]
Permissible gas flow	0.2 - 1.5 l/min	0.2 - 1.0 l/min [6)] 0.2 - 1.5 l/min [13)]	0.2 - 1.0 (+/- 0.1) l/min
Influence of gas flow		≤ 2 % [1) 4)]	≤ 1 % [1) 4)]
Permissible pressure	≤ 1,500 hPa abs.	≤ 1,500 hPa abs. [14)]	≤ 1,500 hPa abs.
Influence of pressure			
(at constant temperature)	≤ 0.10 % per hPa [2)]	≤ 0.10 % per hPa [2)]	≤ 0.10 % per hPa [2)]
(with pressure compensation) [8)]	≤ 0.01 % per hPa [2)]	≤ 0.01 % per hPa [2)]	≤ 0.01 % per hPa [2)]
Influence of temperature			
(pressure constant)			
- on zero point	≤ 1 % per 10 K [1)]	≤ 1 % per 10 K [1)]	≤ 1 % per 10 K in 1 h [1)]
- on span (sensitivity)	± 5 % (+5 to +40 °C) [1) 11)]	≤ 1 % per 10 K [1)]	≤ 2 % per 10 K in 1 h [1)]
Thermostatting	approx. 55 °C [9)] none [13)]	approx. 55 °C [6) 10) 13)]	approx. 75 °C [12)]
Heating-up time	approx. 15 to 50 minutes [5)]	15 to 50 minutes [5)]	approx. 15 to 50 minutes

1) related to full scale
2) related to measuring value
3) from analyzer gas inlet at gas flow of approx. 1.0 l/min. (electrical = 2 s)
4) constant pressure and temperature
5) dependent on integrated photomoter bench / sensor
6) paramagnetic oxygen measurement (PO_2)
7) depending on sensor position
8) optional pressure sensor is required
9) standard 55 °C, optional 65 °C, not for MLT 1
10) located in thermostated chamber (MLT 2/3/4) / thermostated sensor (MLT 1/2)
11) starting from +20 °C (to +5 °C or to + 40 °C)
12) sensor / cell only
13) electrochemical oxygen measurement (EO_2), not located in thermostated chamber
14) no sudden surge for PO_2 allowed!

Altered **NDIR/VIS/UV-Specifications of MLT-ULCO** compared to table 20-1:

Table 20-2	**$CO_{ultra\ low}$ 0 - 10 ppm** **$CO_{2,\ ultra\ low}$ 0 - 5 ppm**	**CO_{low} 0 - 50 ... 2,500 ppm** **CO_{high} 0 - 0.5 ... 10 %** **CO_2 0 - 1 ... 12 %** [2]
Detection limit	≤ 0.2 ppm [3]	≤ 1 % [1] [3]
Linearity	≤ ± 1 % of NV [3] (NV ≥ lowest range)	≤ ± 1 % of NV [3] (NV ≥ 10 % of lowest range)
Zero-point drift	≤ ± 0.2 ppm in 24 hr [3]	≤ 2 % per week [1] [3]
Span (sensitivity) drift	≤ ± 0.2 ppm in 24 hr [3]	≤ 0.5 % per week [1] [3]
Repeatability	≤ ± 0.2 ppm [3]	≤ 1 % [1] [3]
Response time (t_{90})	< 7 s [5] [6] (< 4 s [6] [7])	3 s ≤ t_{90} ≤ 7 s [6] [7]
Influence of gas flow	≤ ± 2 % [1] [3]	≤ ± 1 % [1] [3]
Influence of temperature (pressure constant)		
- on zero point	≤ ± 5 % (+ 5 °C to + 40 °C) [1] [4]	≤ ± 1 % per 10 K [1]
- on span (sensitivity)	≤ ± 5 % (+ 5 °C to + 40 °C) [1] [4]	≤ ± 5 % (+ 5 °C to + 40 °C) [1] [4]
Thermostatting	none	none

1) related to full scale
2) CO_2 0 - 1 ... 15 % on request
3) constant pressure and temperature
4) starting from +20 °C (to +5 °C or to + 40 °C)
5) from analyzer gas inlet at gas flow of approx. 1.0 l/min. (electrical = 4 s)
6) dependent on integrated photomoter bench
7) from analyzer gas inlet at gas flow of approx. 1.0 l/min. (electrical = 2 s)
NV = Nominal value

Cross sensitivities

electrochemical oxygen measurement

Not for use with sample gases containing FCHC´s !

paramagnetic oxygen measurement

100 % Gas	zero-level effect % O_2
N_2	0,00
CO_2	- 0,27
H_2	+ 0,24
Ar	- 0,22
Ne	+ 0,13
He	+ 0,30
CO	+ 0,01
CH_4	- 0,20
C_2H_6	- 0,46
C_2H_4	- 0,26
C_3H_8	- 0,86
C_3H_6	- 0,55
NO	+ 43,0
NO_2	+ 28,0
N_2O	- 0,20

Analyzer module for platform mounting

Front view
(network/24 V dc for platform mounting only)

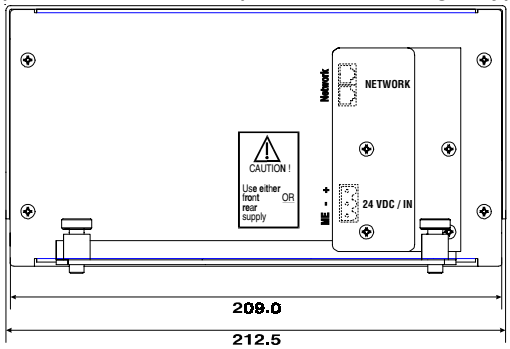

Rear view
(network/24 V dc for outside mounting only)

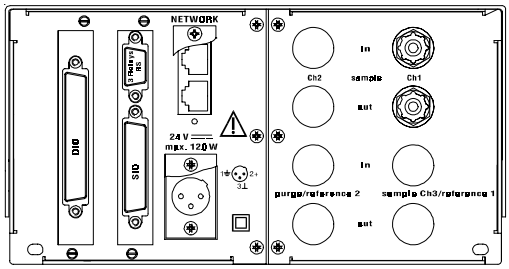

Side view

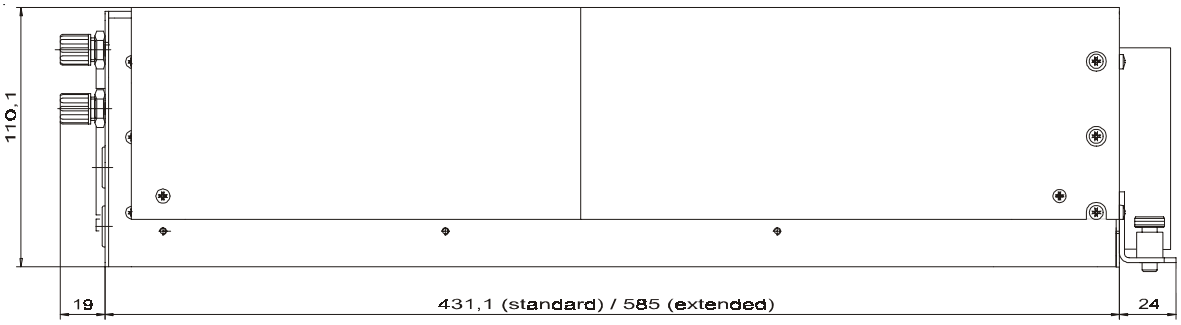

Analyzer / analyzer module for rack mounting / table-top

Front view (analyzer module with blank plate)

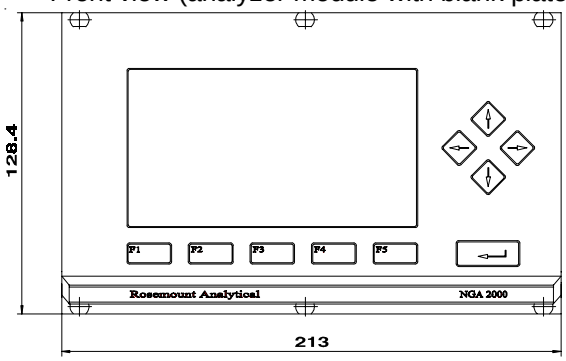

Rear view

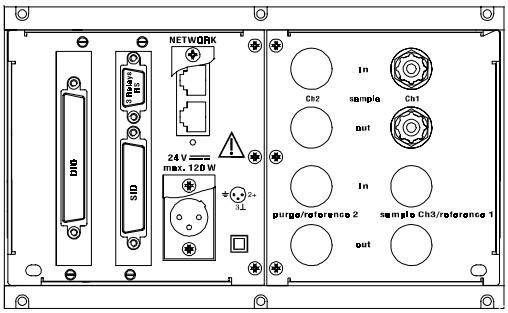

Side view

Fig. 20-1: Dimensional sketch MLT 1 *[all dimensions in mm]*

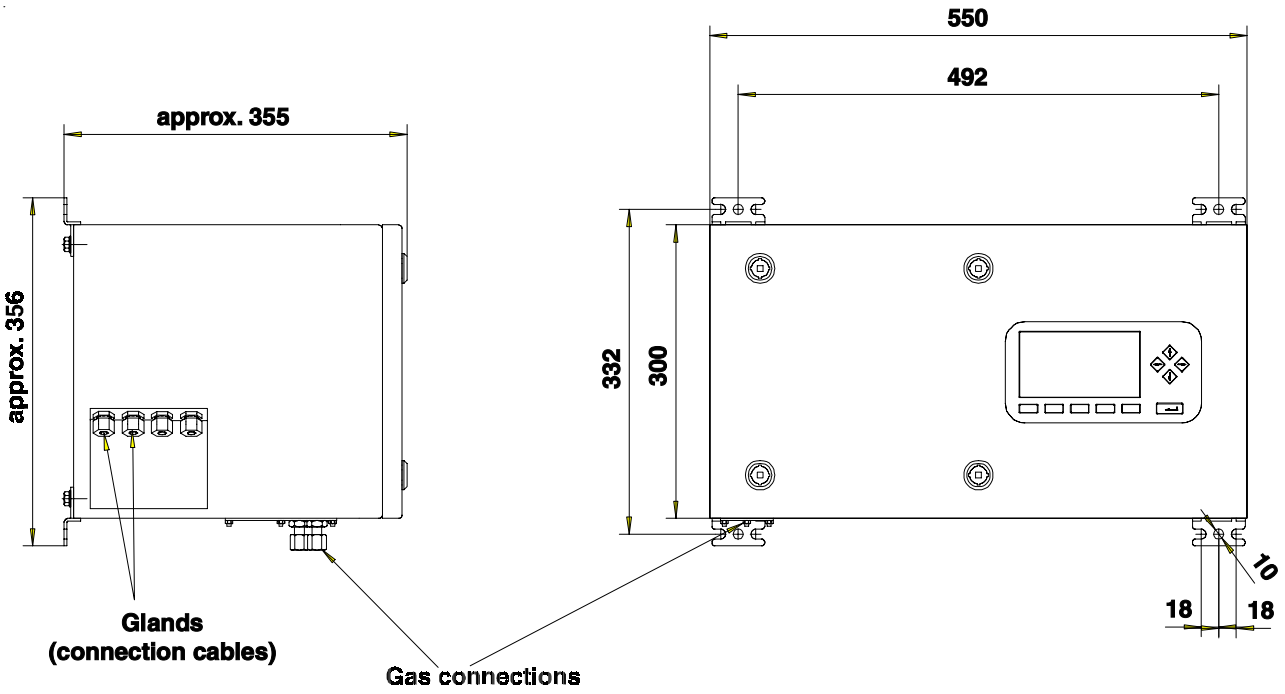

Fig. 20-2: Dimensional sketch / Drill drawing MLT 2 Standard version *[all dimensions in mm]*

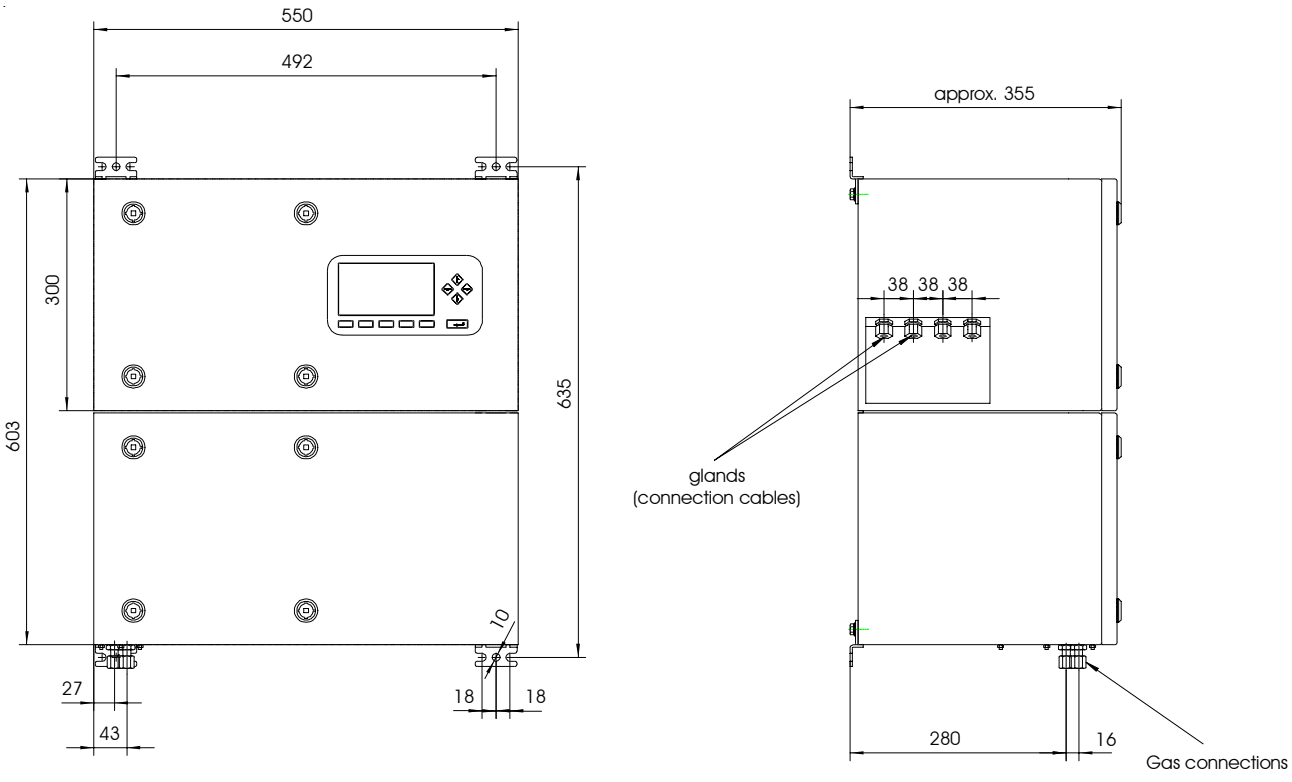

Fig. 20-3: Dimensional sketch / Drill drawing MLT 2 Dual housing version *[all dimensions in mm]*

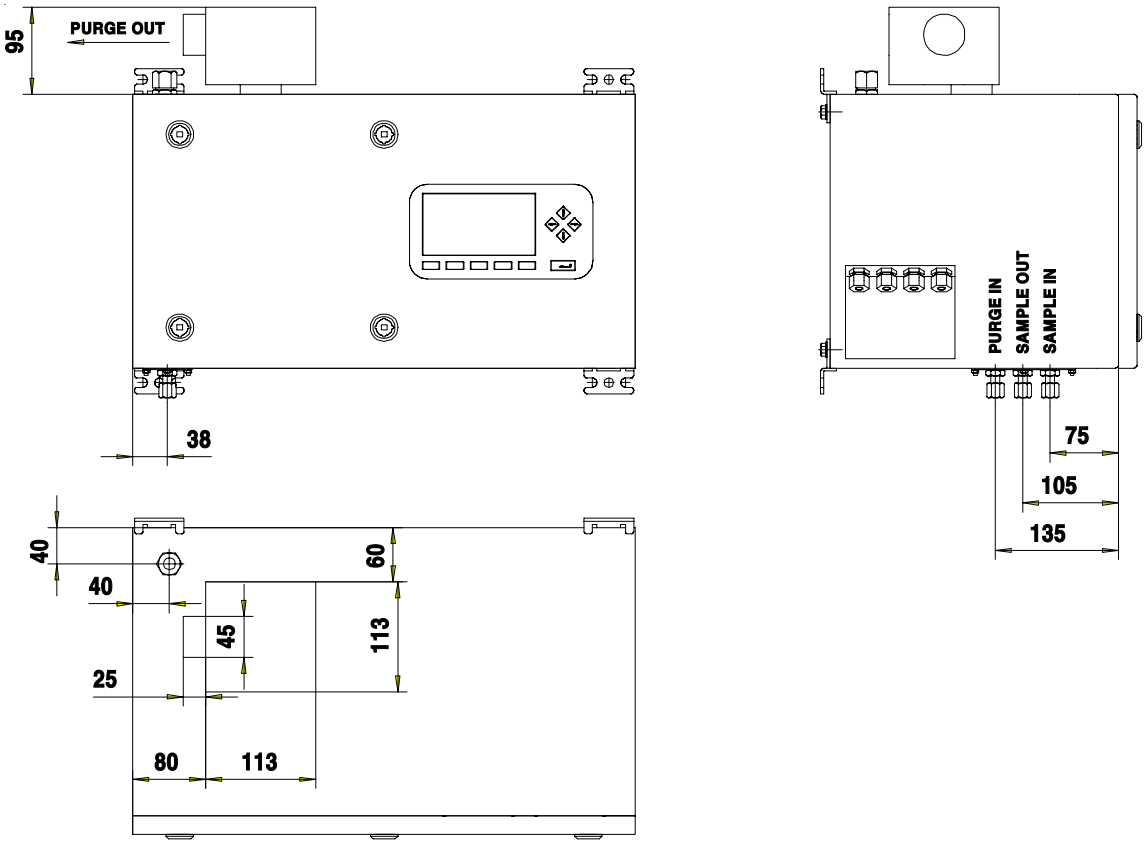

Fig. 20-4: Dimensional sketch MLT 2 for Ex Zone 2 in standard housing *[all dimensions in mm]*

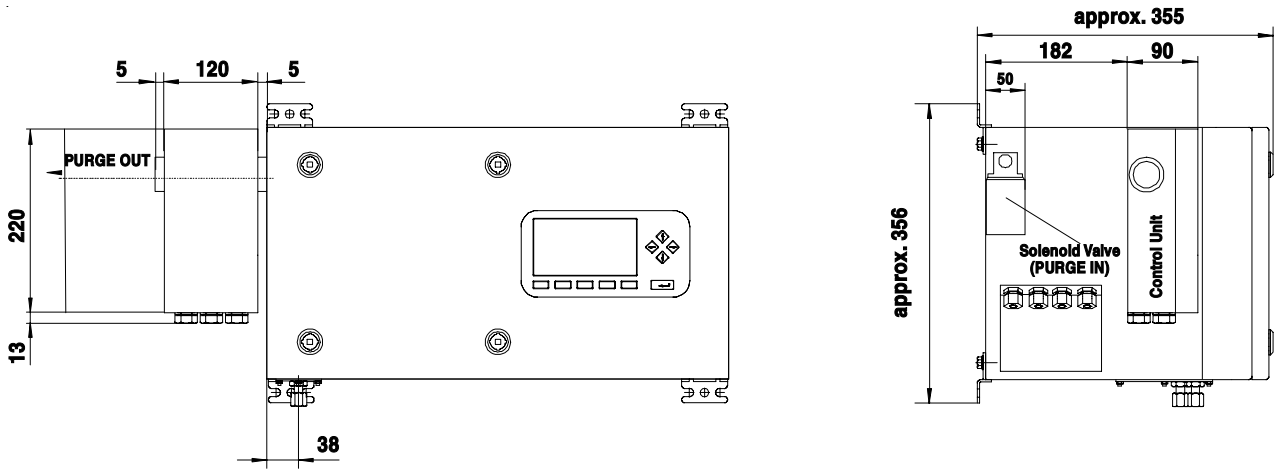

Fig. 20-5: Dimensional sketch MLT 2 for Ex Zone 1 in standard housing *[all dimensions in mm]*

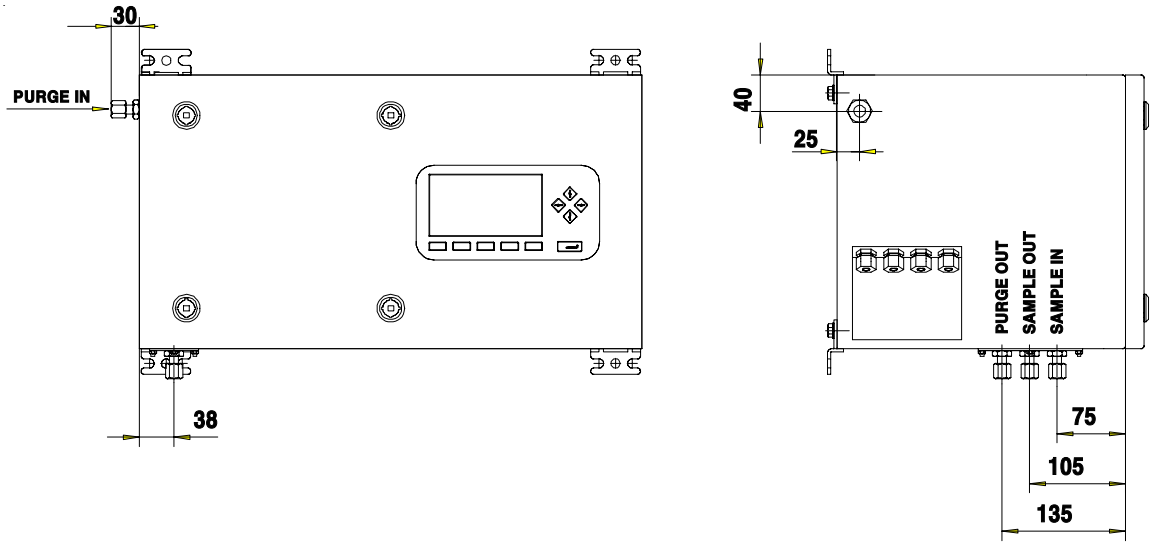

Fig. 20-6: Dimensional sketch MLT 2 for Ex Zones
with "Z Purge" (MLT 2-NF) or "Continuous purge" in standard housing *[all dimensions in mm]*

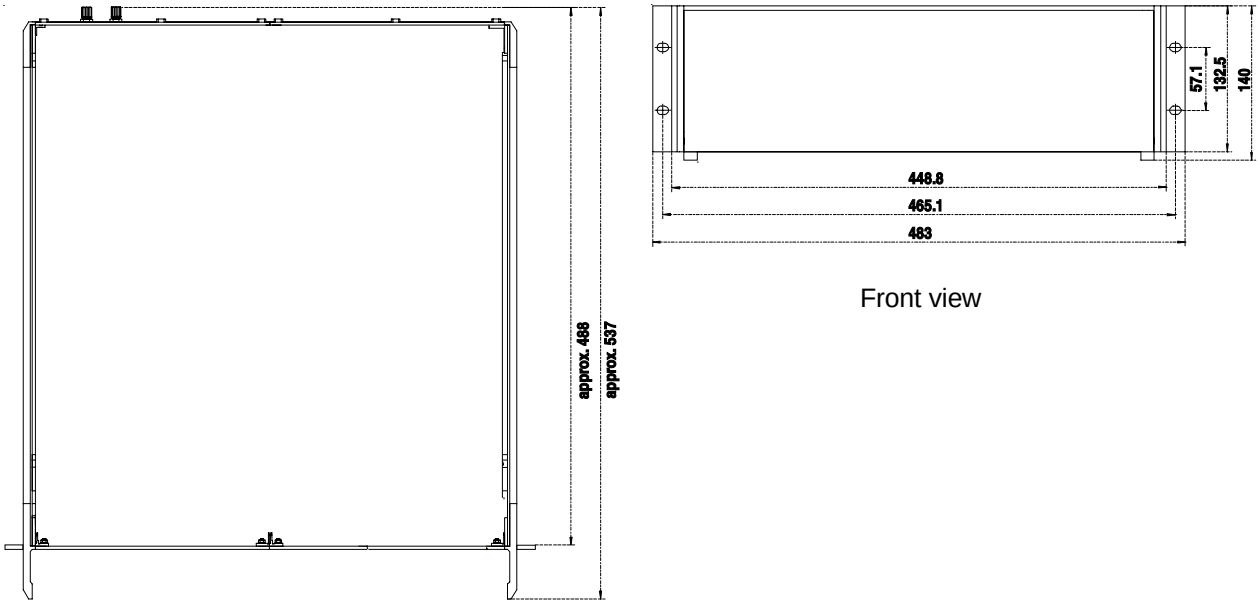

Top view

Front view

Fig. 20-7: Dimensional sketch MLT 3/4 *[all dimensions in mm]*

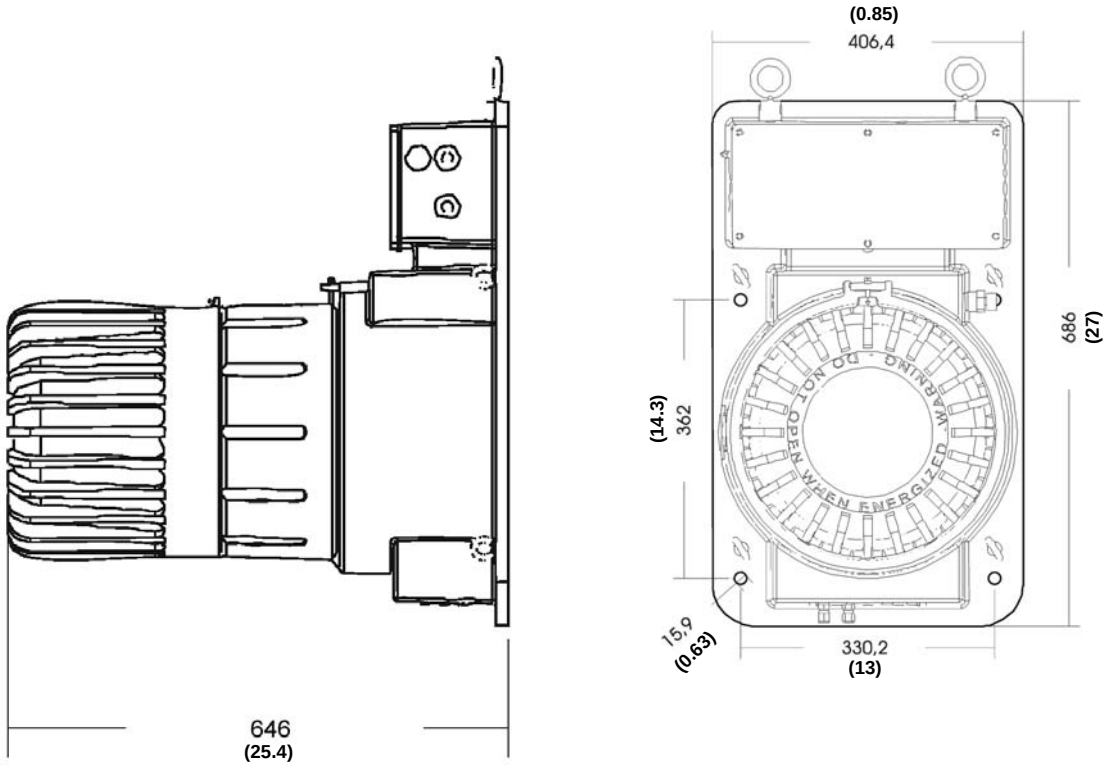

Fig. 20-8: Dimensional sketch / Drill drawing CAT 200 *[all dimensions in mm (Inch)]*

20.4 Voltage supply

20.4.1 Analyzers

20.4.1.1 MLT 1/4

Input	3-pole XLR- Flange (male), lockable
Voltage Supply	24 V dc (+/- 5 %) / 3 A (MLT 1) / 5 A (MLT 4)
[For ac operation {230/120 V}	dc supply by options SL10, SL5 (both for rack mounting only) UPS 01 T, or equivalent power supply]

20.4.1.2 MLT 2/3

Input	terminal strips (MLT 2) / plug (MLT 3)
integrated power supply	MLT 2: SL5 or SL10
	MLT 3 UPS
Power Consumption MLT 2	max. 700 VA
Fuses MLT 2 (internal)	T 6.3A/250 V (2 pcs.)

20.4.1.3 CAT 200

Connection via screw terminal blocks in junction box, cross section:	4 mm^2 max.
Rated input voltage	115-230 V∿ 50/60 Hz
Input voltage range	90 - 264 V∿, 47 - 63 Hz
Rated input power	max. 380 W

20.4.1.4 Electrical Safety

Over-voltage category	II
Pollution degree	2
Safety Class	2 for MLT 1/4 instruments.
	1 for MLT 2/3 instruments
all I/O´s	SELV voltage
	optically isolated to electrical supply

20.4.2 Power Supplies

20.4.2.1 UPS 01 T (Universal Power Supply)

This power supply unit may be ordered for supplying tabletop analyzers and rack mount analyzers not requiring a rail mounted power supply.

Model designation	UPS 01 T
Input	
Rated input voltage	120 / 230 V∿ 50/60 Hz
Input voltage range	99 - 138 / 187-264 V∿
Rated input power	max. 240 VA
Input connector	IEC plug (fig. 1-58a)
Output	
Rated output voltage	24 V⎓ (+- 5 %)
Rated output current	max. 5 A
Output connector	3 pole XLR socket (fig. 1-58b)
Protection measures	
Overload protection	Current limitation, typ. 110% I_{rated}, straight characteristic, output permanent short-circuit proof
Overtemperature protection	Reduction of output voltage until unit switches off. Return to normal operation after cooling down.
Weight	approx. 2.5 kg
Compliances	
Electrical safety	EN 60950, UL1950, CSA22.2 NO 950-95
Electromagnetic compatibility	EN 50081-1 (emmision) EN 50082-2 (immunity) and others

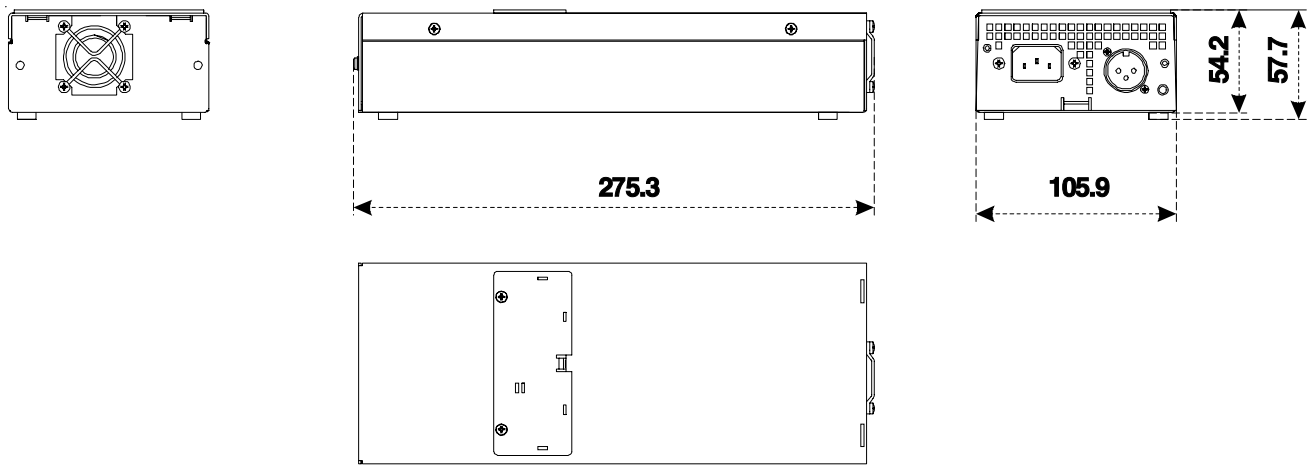

Fig. 20-9: Dimensional sketch UPS 01 T** (Universal Power Supply)**, table-top version
rack module turn around 90° [all dimensions in mm, without cable and plugs]

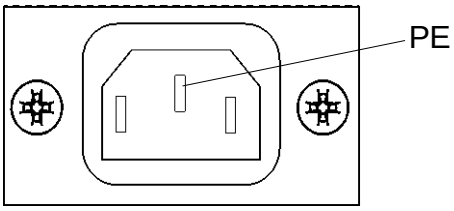

Fig. 20-10a: IEC mains input plug

Pin 1: ME
Pin 2: + 24 V⎓
Pin 3: 0 V (⊥)
Shield: Housing

Fig. 20-10b: 24 V DC output socket
Pin assignment

20.4.2.2 External 5A Power Supply Unit for DIN Rail Installation

This power supply unit may be ordered for supplying analyzers installed in a rack, where mounting the power supply on a DIN rail is required.

Model designation	SL5
Input	
Rated input voltage (manual switch)	100-120 / 220-240 V∿ 50/60 Hz
Input voltage range	85 - 132 / 176 - 264 V∿, 47 - 63 Hz
Rated input current	< 2.6 A (switch at 115 V position) < 1.4 A (switch at 230 V position)
Input	Screw terminals at front (bottom)
Output	
Rated voltage	24 V⎓ (+ 5 %, -1 %)
Output current	max. 5 A
Output	Screw terminals at front (top)
Efficiency	
Efficiency	typ. 90 % (230 VAC, 24 V / 5 A)
Losses	typ. 13.3 W (230 VAC, 24 V / 5 A)
Protection Measures	
Overload protection	against short circuit, overload and open circuit
Overtemperature protection	Derating > 60° C
Design and Installation	
Weight	ca. 0.62 kg
Dimensions (w x h x d)	65 mm x 125 mm x 103 mm
Spacing for cooling	above / below 25 mm each left / right sides 15 mm each
Compliances	
Electrical safety	EN 60950, EN 50178, UL1950, CSA22.2 Nr. 234-M90
Electromagnetic compatibility	EN 50081-1, class B (emission) EN 50082-2, class A (immunity) and others

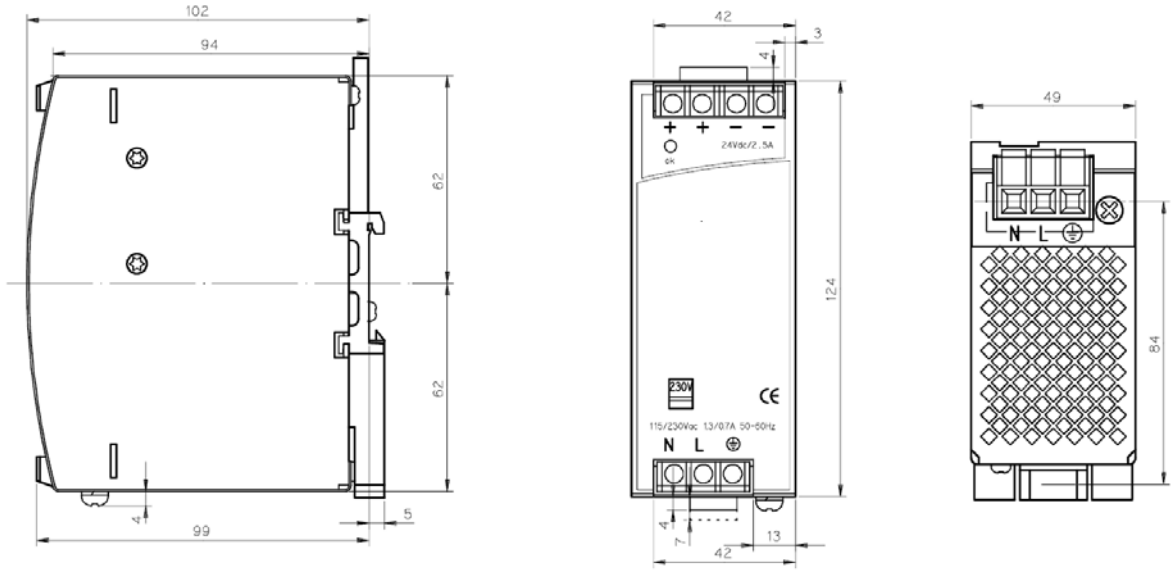

Right side *Front side* *Bottom side*

Fig. 20-11: Power Supply SL5
Dimensions *(approx. [mm])*

20.4.2.3 External 10A Power Supply Unit for DIN Rail Installation

This power supply unit may be ordered for supplying analyzers installed in a rack, where mounting the power supply on a DIN rail is required.

Model designation	SL10
Input	
Rated input voltage (manual switch)	100-120 / 220-240 V∿ 50/60 Hz
Input voltage range	85 - 132 / 176 - 264 V∿, 47 - 63 Hz
Rated input current	< 6 A (switch at 115 V position) < 2.8 A (switch at 230V position)
Input	Screw terminals at front (left side)
Output	
Rated voltage	24 V⎓ (+ 5 %, -1 %)
Output current	max. 10 A
Output	Screw terminals at front (right side)
Efficiency	
Efficiency	typ. 89 % (230 VAC, 24 V / 10 A)
Losses	typ. 29 W (230 VAC, 24 V / 10 A)
Protection Measures	
Overload protection	against short circuit, overload and open circuit
Overtemperature protection	Derating > 60° C
Design and Installation	
Weight	approx. 1.2 kg
Dimensions (w x h x d)	120 mm x 124 mm x 102 mm
Spacing for cooling	above / below 25 mm each left / right sides 15 mm each
Compliances	
Electrical safety	EN 60950, EN 50178, UL1950, CSA22.2 Nr. 234-M90
Electromagnetic compatibility	EN 50081-1, class B (emission) EN 50082-2, class A (immunity) and others

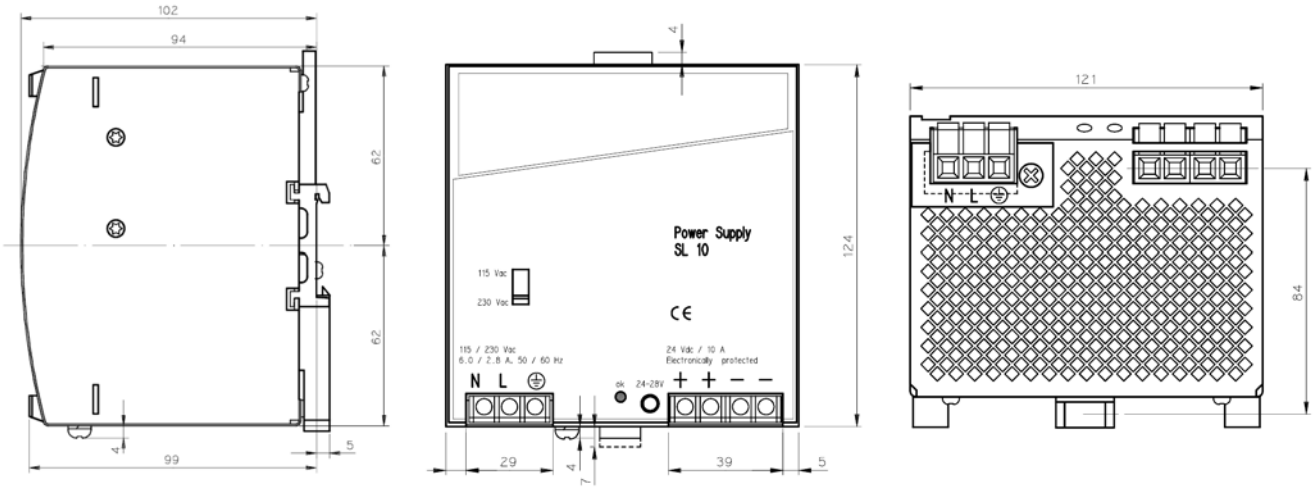

Right side *Front side* *Bottom side*

Fig. 20-12:Power Supply SL 10
Dimensions *(approx. [mm])*

20.4.2.4 Tabletop Power Supply Units

This power supply unit may be ordered for supplying two tabletop analyzers by one shared power supply unit.
A variation for installation in a module rack is available, too, with output currents of 10 A or 5 A.

Model designations	10 A tabletop power supply unit
	10 A rack module power supply unit
	5 A rack module power supply unit

For electrical input and output data, efficiency, protection measures and compliances (internal power supply unit only) see

section 20.4.2.3 for 10 A versions
section 20.4.2.2 for 5 A version.

Design and Installation

Dimensions, approx. (w x h x d)	142 mm x 260 mm x 128 mm
Spacing for cooling	front / rear side 15 mm each

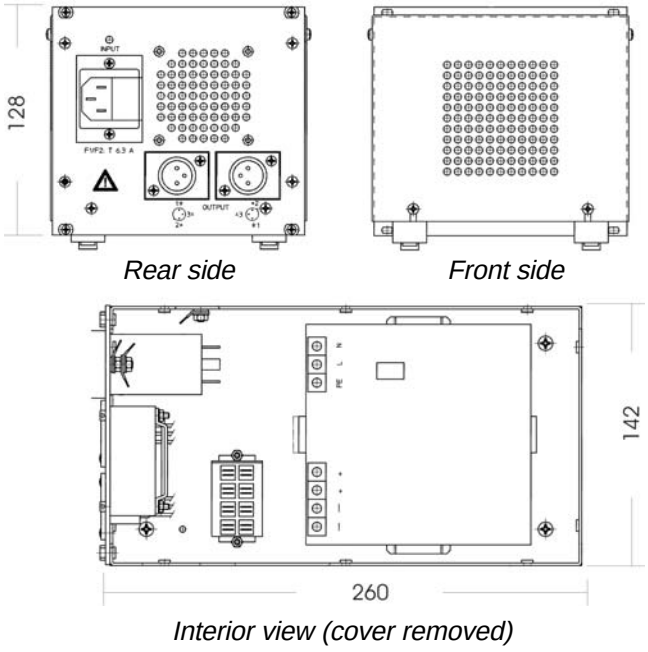

Fig. 20-13: 10 A Tabletop Power Supply
Dimensions *(approx. [mm])*

21. Pin Assignments

To stay in compliance with regulations regarding electromagnetic compatibility it is recommended to use only shielded cables, as optionally available from Emerson Process Management or equivalent. Customer has to take care that the shield is connected in proper way. Shield and signal connector enclosure need to be conductively connected, submin-d plugs and sockets must be screwed to the analyzer.

Using external submin-d-to-terminal adaptor elements (option) affects electromagnetic compatibility. In this case the customer has to take measures to stayin compliance and has to declare conformity, when required by legislation (e.g. European EMC Directive).

Adaptor terminals are one-to-one connected to the submin-d pin of same designation: Terminal 1 is connected to pin 1, terminal 2 to pin 2 etc. !

21.1 24 V dc Input (MLT 1/4)

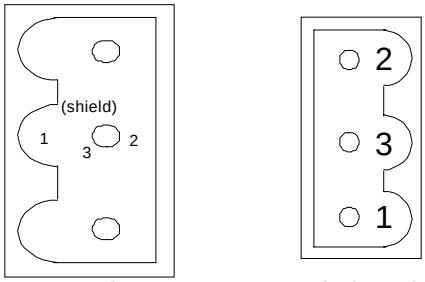

Supply from rear

Supply from front (see Fig. 6-1, too)

Pin 1:	ME
Pin 2:	+ 24 V dc
Pin 3:	0 V DC (⊥)
shield:	housing flange

Fig. 21-1: Pin assignments 24 V dc Input (MLT 1/4)

21.2 230/120 V ac Input (MLT 3)

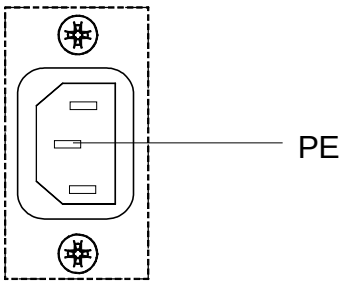

Fig. 21-2: Pin assignments 230/120 V ac Input (MLT 3)

21.3 Option SIO (Standard I/O)

21.3.1 Analog Signal Outputs

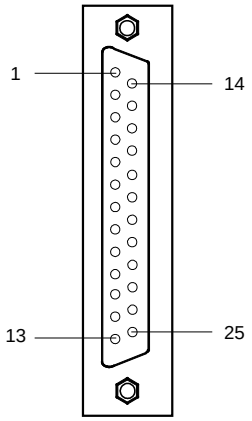

1	± 11 V DC (burden > 2 kΩ), Output 1
2	± 22 mA, (burden 500 Ω), Output 1
3	± 11 V DC (burden > 2 kΩ), Output 2
4	± 22 mA, (burden 500 Ω), Output 2
5	⊥ (V DC), Outputs 1 + 2
6	⊥ (mA), Outputs 1 + 2
7	± 11 V DC (burden > 2 kΩ), Output 3 (Option)
8	± 22 mA, (burden 500 Ω), Output 3 (Option)
9	± 11 V DC (burden > 2 kΩ), Output 4 (Option)
10	± 22 mA, (burden 500 Ω), Output 4 (Option)
11	⊥ (V DC), Outputs 3 + 4 (Option)
12	⊥ (mA), Outputs 3 + 4 (Option)
13	FE
14	± 11 V DC (burden > 2 kΩ), Output 5 (Option)
15	± 22 mA, (burden 500 Ω), Output 5 (Option)
16	± 11 V DC (burden > 2 kΩ), Output 6 (Option)
17	± 22 mA, (burden 500 Ω), Output 6 (Option)
18	⊥ (V DC), Outputs 5 + 6 (Option)
19	⊥ (mA), Outputs 5 + 6 (Option)
20	± 11 V DC (burden > 2 kΩ), Output 7 (Option)
21	± 22 mA, (burden 500 Ω), Output 7 (Option)
22	± 11 V DC (burden > 2 kΩ), Output 8 (Option)
23	± 22 mA, (burden 500 Ω), Output 8 (Option)
24	⊥ (V DC), Outputs 7 + 8 (Option)
25	⊥ (mA), Outputs 7 + 8 (Option)

Fig. 21-3: Pin assignments Socket Analog Signal Outputs (Option SIO)

21.3.2 Relay Outputs / Serial Interfaces

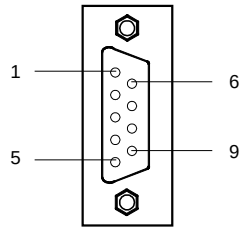

1	⊥ (GND)
2	RxD
3	TxD
4	not used
5	⊥ (GND)
6	Relay Contact 1 (max. 30 V / 1 A / 30 W)
7	Relay Contact 2 (max. 30 V / 1 A / 30 W)
8	Relay Contact 3 (max. 30 V / 1 A / 30 W)
9	Relay Contacts (Common)

Fig. 21-4a: Pin assignments Socket Relay Outputs / RS 232 Serial Interface (Option SIO)

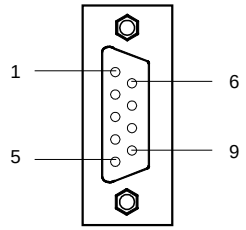

1	⊥ (GND)
2	RxD-
3	RxD+
4	TxD+
5	TxD-
6	Relay Contact 1 (max. 30 V / 1 A / 30 W)
7	Relay Contact 2 (max. 30 V / 1 A / 30 W)
8	Relay Contact 3 (max. 30 V / 1 A / 30 W)
9	Relay Contacts (Common)

Fig. 21-4b: Pin assignments Socket Relay Outputs / RS 485 Serial Interface (Option SIO)

21.4 Option DIO (Digitale I/O)

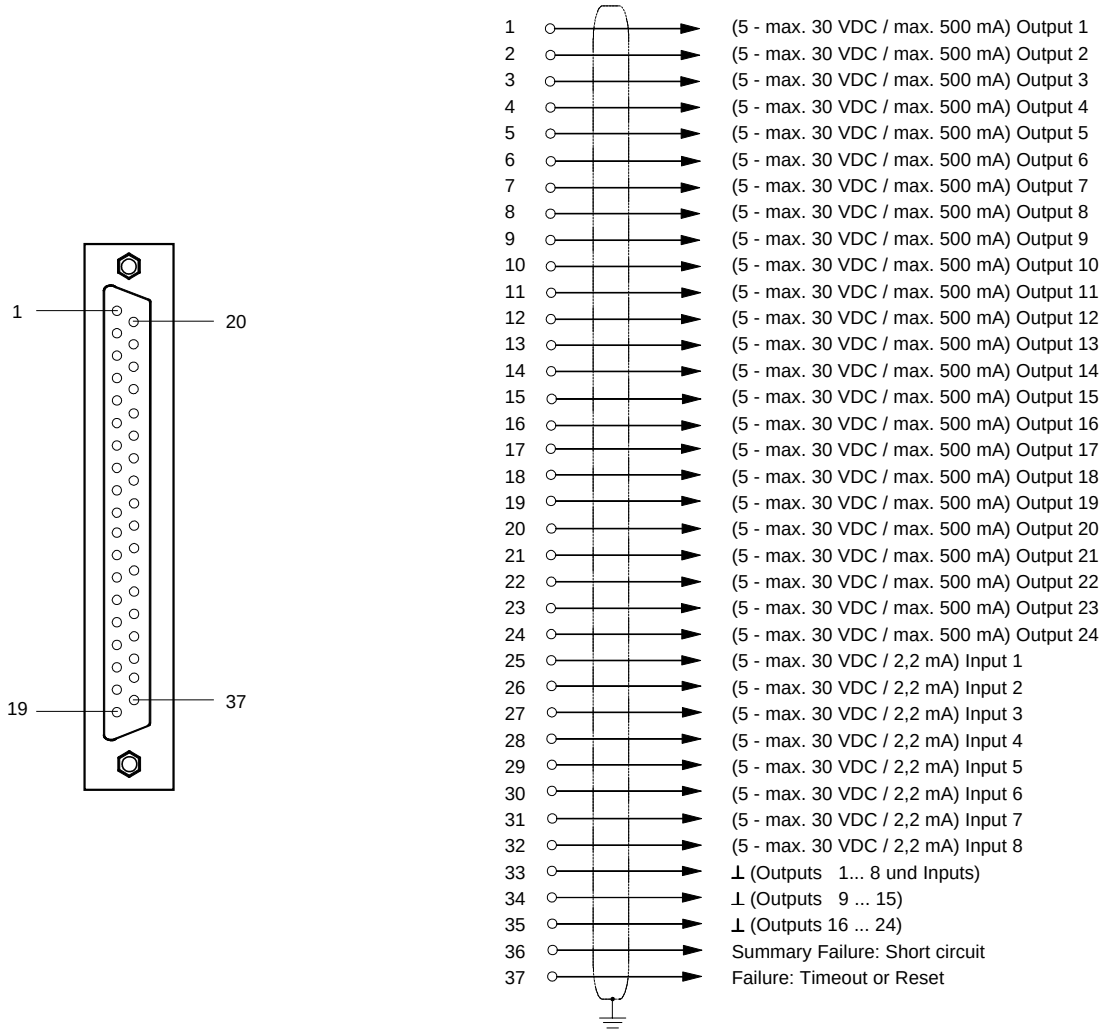

Fig. 21-5: Pin assignments Socket Digital Inputs/Outputs (Option DIO)

Further informations about the options SIO/DIO you will find in the chapters ”1.8.7”, ”1.8.8” and “Preface” of this instruction manual and in the software manual!

21.5 Terminal Assignment of CAT 200

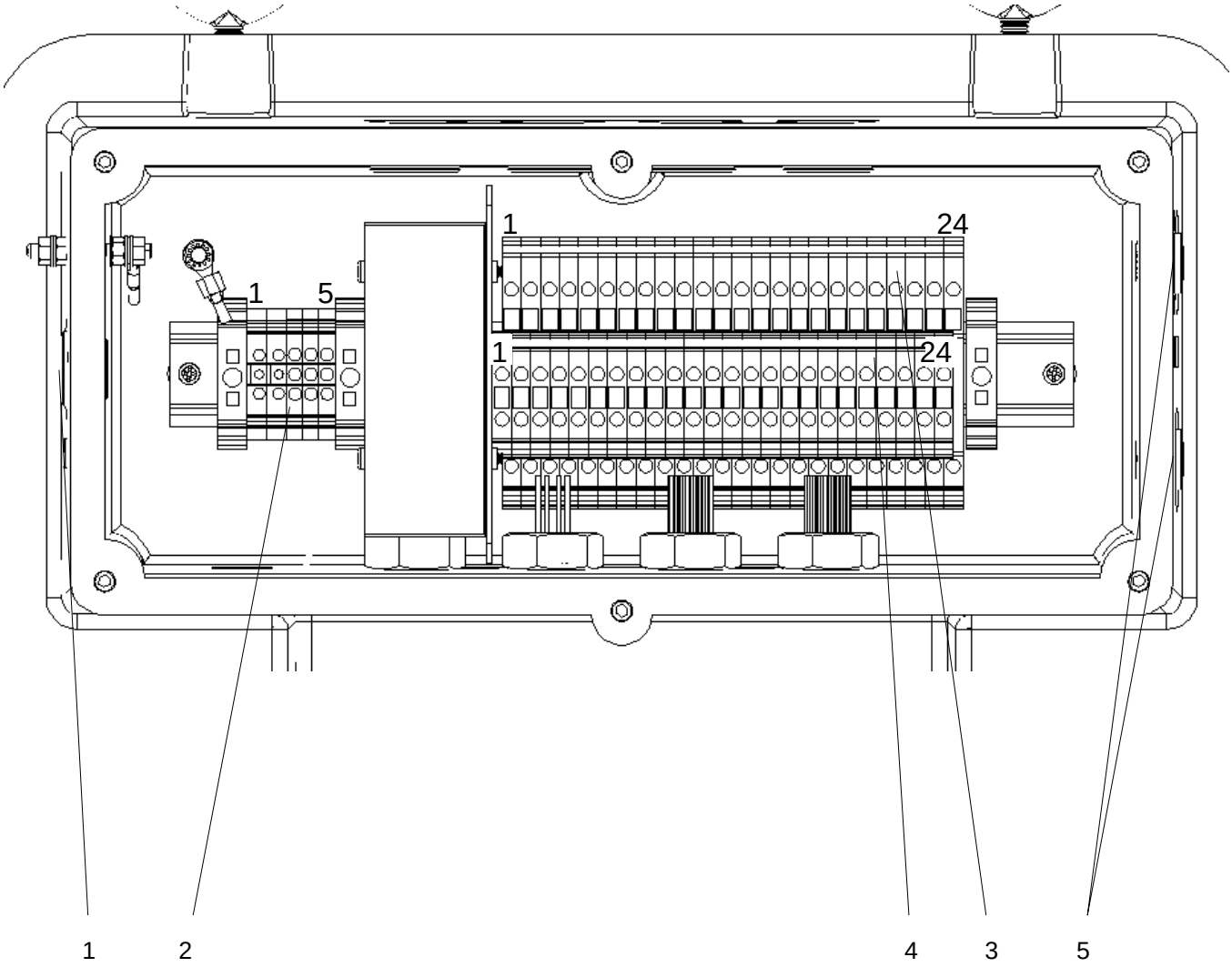

Fig. 21-6: CAT 200, Junction box, interior view

1	Cable gland mains	4	Lower signal terminals (24).
2	Mains terminals	5	Signal cable glands (max. 3)
3	Upper signal terminals (24)		

Note!
Assignment of signals to signal terminals inside junction box varies depending on selected analyzer options. For assignments of your specific analyzer refer to the label on the inner side of the junction box cover.

General terminal assignments (examples) for the different kinds of available signals are given on the following pages.

Mains Terminal	Description
1	Hot (line In)
2	Neutral
3	Ground
4	Ground
5	Ground

Table 21-1: CAT 200 Power Connections Terminal Assignments

Terminal	Description
Upper 1	± 22 mA, (burden 500 Ω), Output 1
Upper 2	± 22 mA, (burden 500 Ω), Output 2
Upper 3	⊥ (mA), Outputs 1 + 2
Upper 4	± 22 mA, (burden 500 Ω), Output 3 (option)
Upper 5	± 22 mA, (burden 500 Ω), Output 4 (option)
Upper 6	⊥ (mA), Outputs 3 + 4
Upper 7	± 22 mA, (burden 500 Ω), Output 5 (option)
Upper 8	± 22 mA, (burden 500 Ω), Output 6 (option)
Upper 9	⊥ (mA), Outputs 5 + 6
Upper 10	± 22 mA, (burden 500 Ω), Output 7 (option)
Upper 11	± 22 mA, (burden 500 Ω), Output 8 (option)
Upper 12	⊥ (mA), Outputs 7 + 8

Table 21-2: CAT 200 Analog Signal Outputs Terminal Assignments *(Option SIO)*

Terminal	Description
Lower 6	Relay Contact 1 (max. 30 V / 1 A / 30 W)
Lower 7	Relay Contact 2 (max. 30 V / 1 A / 30 W)
Lower 8	Relay Contact 3 (max. 30 V / 1 A / 30 W)
Lower 9	Relay Contacts Cmmon

Table 21-3: CAT 200 Relay Outputs Terminal Assignments *(Option SIO)*

Terminal	Description
Lower 10	Field Bus +
Lower 11	Field Bus -
Lower 12	Ground Field Bus

Table 21-4: CAT 200 Field Bus Terminal Assignments *(Option)*

Terminal	RS 232	RS 485
Lower 1	Ground	Ground
Lower 2	RxD	RxD -
Lower 3	TxD	RxD +
Lower 4	Not used	TxD +
Lower 5	Ground	TxD -

Table 21-5: CAT 200 RS 232 / RS 485 Serial Interface Terminal Assignments *(Option SIO)*

Terminal	Description
Upper 13	(5 - max. 30 VDC / max. 500 mA) Output 1
Upper 14	(5 - max. 30 VDC / max. 500 mA) Output 2
Upper 15	(5 - max. 30 VDC / max. 500 mA) Output 3
Upper 16	(5 - max. 30 VDC / max. 500 mA) Output 4
Upper 17	(5 - max. 30 VDC / max. 500 mA) Output 5
Upper 18	(5 - max. 30 VDC / max. 500 mA) Output 6
Upper 19	(5 - max. 30 VDC / max. 500 mA) Output 7
Upper 20	(5 - max. 30 VDC / max. 500 mA) Output 8
Upper 21	(5 - max. 30 VDC / max. 500 mA) Output 9
Upper 22	(5 - max. 30 VDC / max. 500 mA) Output 10
Upper 23	(5 - max. 30 VDC / max. 500 mA) Output 11
Upper 24	(5 - max. 30 VDC / max. 500 mA) Output 12
Lower 13	(5 - max. 30 VDC / max. 500 mA) Output 13
Lower 14	(5 - max. 30 VDC / max. 500 mA) Output 14
Lower 15	(5 - max. 30 VDC / max. 500 mA) Output 15
Lower 16	(5 - max. 30 VDC / 2,2 mA) Input 1
Lower 17	(5 - max. 30 VDC / 2,2 mA) Input 2
Lower 18	(5 - max. 30 VDC / 2,2 mA) Input 3
Lower 19	(5 - max. 30 VDC / 2,2 mA) Input 4
Lower 20	(5 - max. 30 VDC / 2,2 mA) Input 5
Lower 21	(5 - max. 30 VDC / 2,2 mA) Input 6
Lower 22	⊥ (Outputs 1... 8 und Inputs)
Lower 23	⊥ (Outputs 9...15)

Table 21-6: CAT 200 Digital Inputs/Outputs Terminal Assignments *(Option DIO)*

21.6 CAT 200 Increased Safety Box - Label Schematic

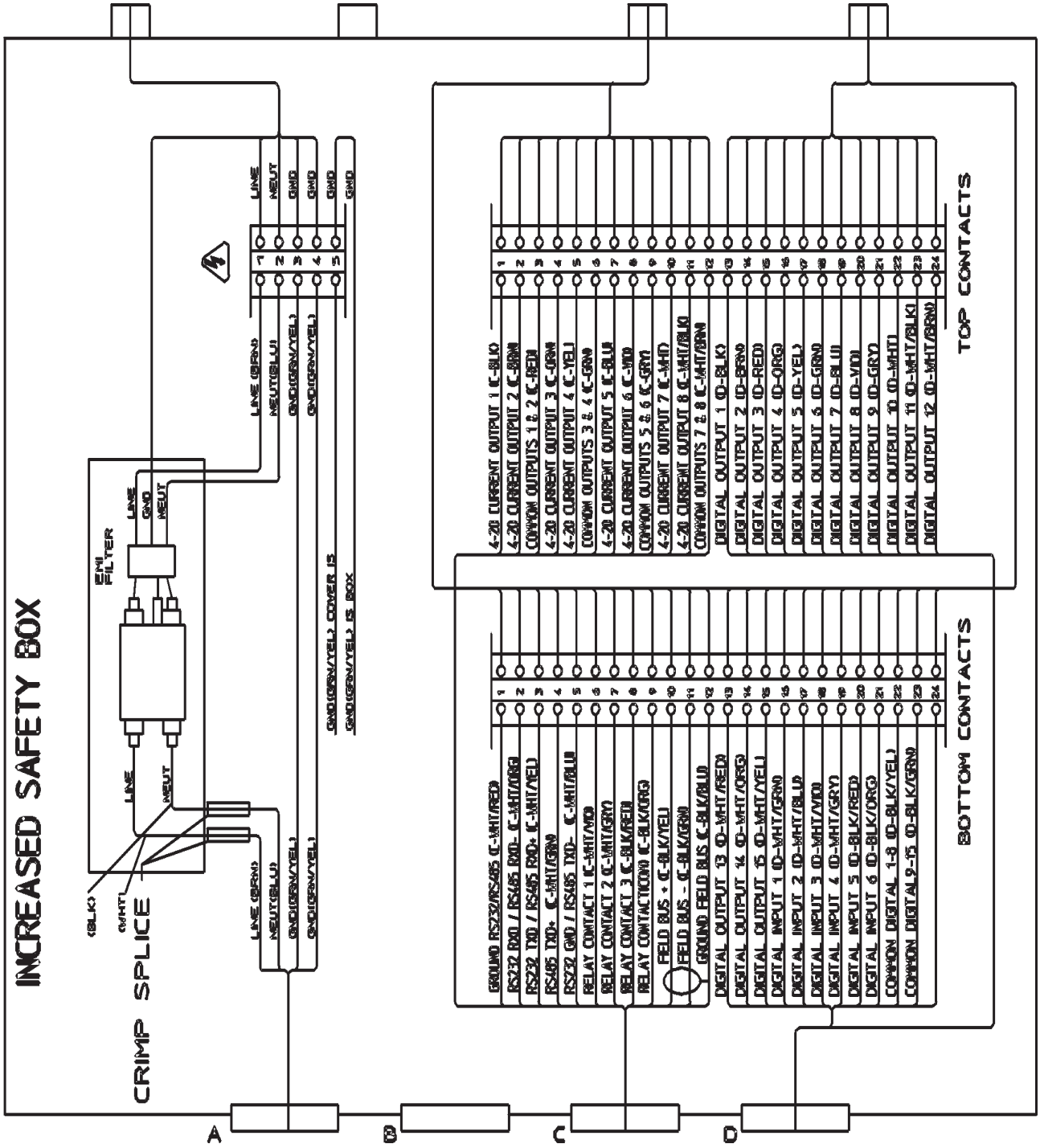

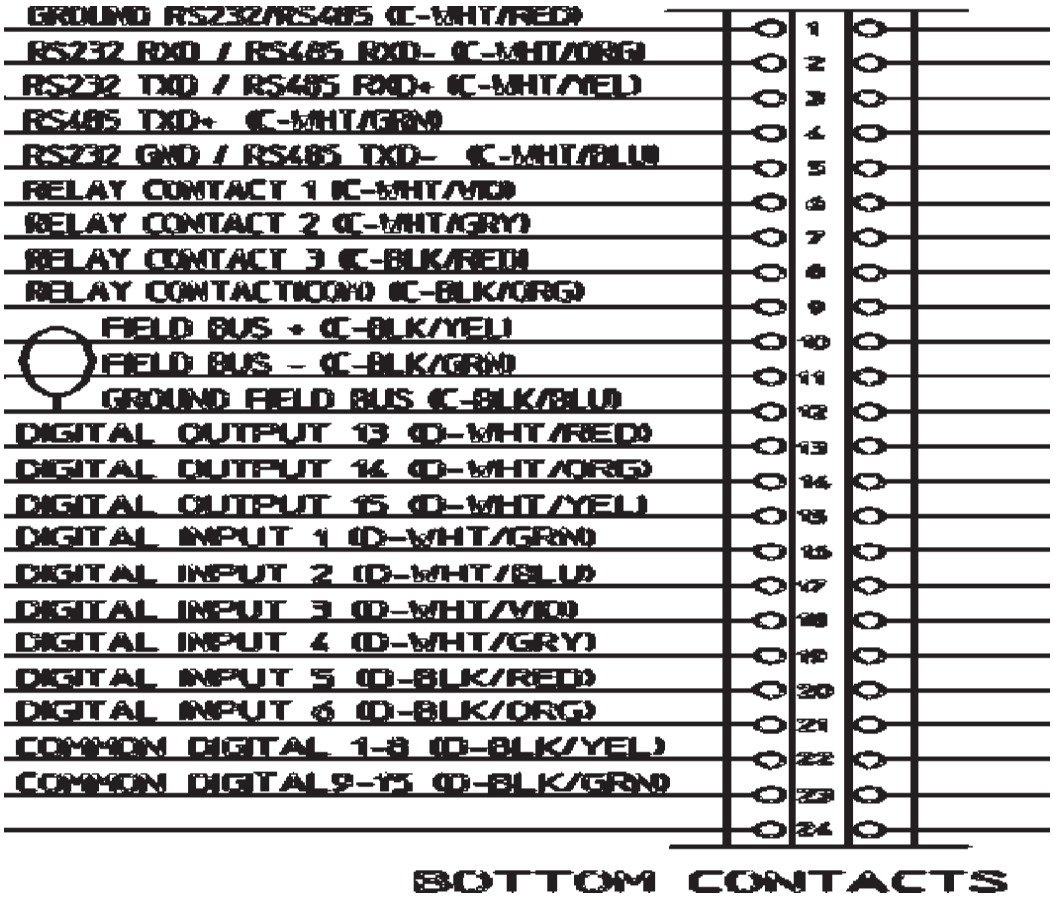

***Table 21-7: CAT 200 Terminal Assignments** - Bottom (Lower) Contacts*

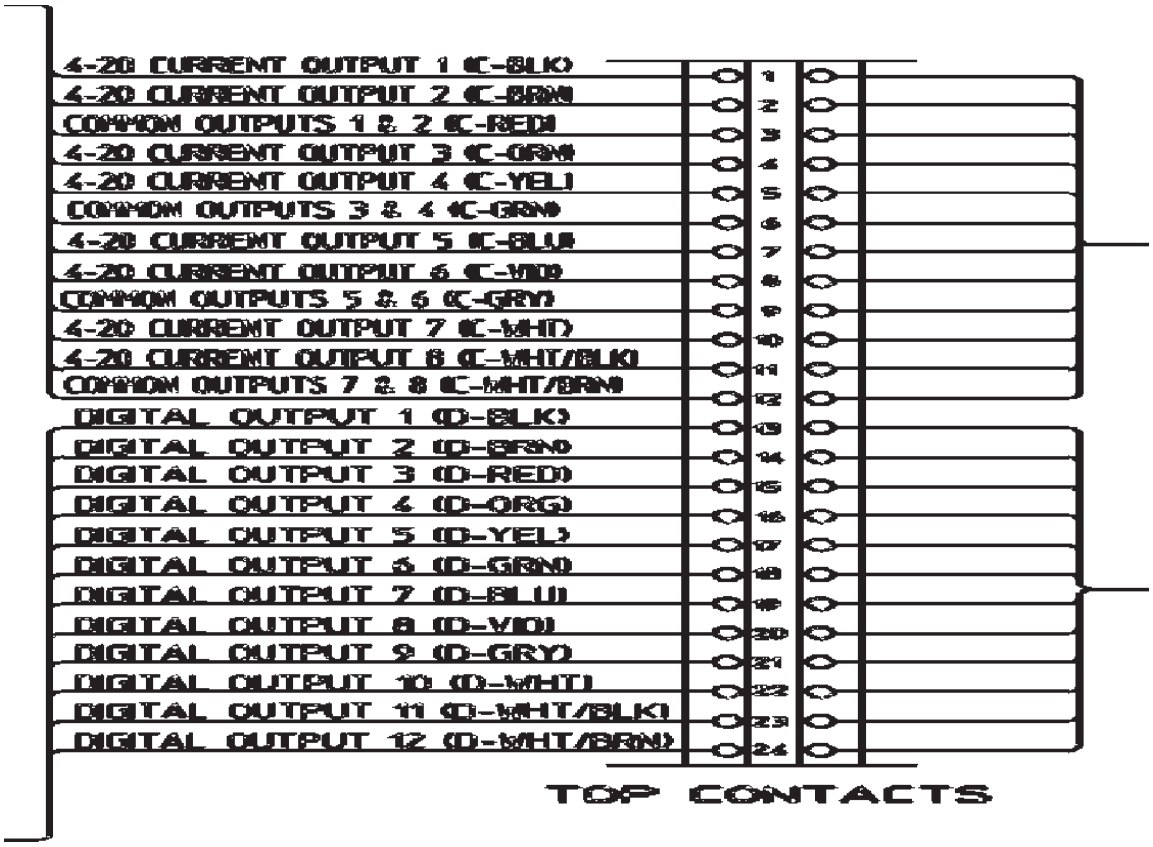

***Table 21-8: CAT 200 Terminal Assignments** - Top (Upper) Contacts*

22. Calculation of Water Content from Dew-point to Vol. -% or g/Nm³

Table 22-1

Dew-point		Water Content	Water Concentration
° C	° F	Vol. -%	g/Nm³
+ 0	+ 32,0	0,60	4,88
+ 1	+ 33,8	0,65	5,24
+ 2	+ 36,8	0,68	5,64
+ 3	+ 37,4	0,75	6,06
+ 4	+ 39,2	0,80	6,50
+ 5	+ 41,0	0,86	6,98
+ 6	+ 42,8	0,92	7,49
+ 7	+ 44,6	0,99	8,03
+ 8	+ 46,4	1,06	8,60
+ 9	+ 48,2	1,13	9,21
+ 10	+ 50,0	1,21	9,86
+ 11	+ 51,8	1,29	10,55
+ 12	+ 53,6	1,38	11,29
+ 13	+ 55,4	1,48	12,07
+ 14	+ 57,2	1,58	12,88
+ 15	+ 59,0	1,68	14,53
+ 16	+ 60,8	1,79	14,69
+ 17	+ 62,6	1,90	16,08
+ 18	+ 64,4	2,04	16,72
+ 19	+ 66,2	2,16	17,72
+ 20	+ 68,0	2,30	19,01
+ 21	+ 69,8	2,45	20,25
+ 22	+ 71,6	2,61	21,55
+ 23	+ 73,4	2,77	22,95
+ 24	+ 75,2	2,95	24,41
+ 25	+ 77,0	3,12	25,97
+ 26	+ 78,8	3,32	27,62
+ 27	+ 80,6	3,52	29,37
+ 28	+ 82,4	3,73	32,28
+ 29	+ 84,2	3,96	33,15
+ 30	+ 86,0	4,18	35,20
+ 31	+ 87,6	4,43	37,37
+ 32	+ 89,6	4,69	39,67
+ 33	91,4	4,97	42,09
+ 34	+ 93,2	5,25	44,64
+ 35	+ 95,0	5,55	47,35
+ 36	+ 96,8	5,86	50,22
+ 37	+ 98,6	6,20	53,23
+ 38	+ 100,4	6,55	56,87
+ 39	+ 102,2	6,90	59,76
+ 40	+ 104,0	7,18	62,67

Dew-point		Water Content	Water Concentration
° C	° F	Vol. -%	g/Nm³
+ 42	+ 107,6	8,10	70,95
+ 44	+ 111,2	8,99	79,50
+ 45	+ 113,0	9,45	84,02
+ 46	+ 114,8	9,96	89,20
+ 48	+ 118,4	11,07	99,80
+ 50	+ 122,0	12,04	110,81
+ 52	+ 125,6	13,43	124,61
+ 54	+ 129,2	14,80	139,55
+ 55	+ 131,0	15,55	147,97
+ 56	+ 132,8	16,29	156,26
+ 58	+ 136,4	17,91	175,15
+ 60	+ 140,0	19,65	196,45
+ 62	+ 143,6	21,55	220,60
+ 64	+ 147,2	23,59	247,90
+ 66	+ 150,8	25,80	279,20
+ 68	+ 154,4	28,18	315,10
+ 70	+ 158,0	30,75	356,70
+ 72	+ 161,6	33,50	404,50
+ 74	+ 165,2	36,47	461,05
+ 76	+ 168,8	39,66	527,60
+ 78	+ 172,4	43,06	607,50
+ 80	+ 176,0	46,72	704,20
+ 82	+ 179,6	50,65	824,00
+ 84	+ 183,2	54,84	975,40
+ 86	+ 186,8	59,33	1171,50
+ 88	+ 190,4	64,09	1433,30
+ 90	+ 194,0	69,18	1805,00

Remark: Norm conditions are related to 273 K (0 °C) and 1013 hPa (mbar).
The water concentration is calculated under dry norm conditions which means after (fictive) subtraction of moisture content on water vapor.

APPENDIX Declaration of Conformity

A-1 MLT 1

A-2 MLT 2

A-3 MLT 3

A-4 MLT 4

A-5 MLT 5

EC DECLARATION OF CONFORMITY

Document number: RAE/MLT 1-E9
Date: February 2008

We,

Emerson Process Management GmbH & Co. OHG

located at

Industriestrasse 1, D-63594 Hasselroth, Germany

declare under our sole responsibility that our gas analyzer, type

MLT 1

to which this declaration relates is in conformity with the provisions of:

89/336/EEC **EMC Directive** **(changed by directive 91/263/EEC 92/31/EEC and 93/68/EEC)**
with the application of the harmonized standards:

EN 61326-1:1997 + A1:1998 + A2:2001 + A3:2003	Electrical equipment for measurement, control and laboratory use - EMC requirements

---

97/23/EC **Pressure Equipment Directive**
This analyzer has been designed and manufactured considering article 3, paragraph 3 of the above mentioned directive and therefore CE marking does not refer to this directive.

This document covers all 1/2 19" MLT 1 gas analyzer variations including tabletop housing (T), internal module (A), external module (M) or rack installation (R), each standard or extended (E) housing.

Hasselroth, February 2008

.....
(Signature)

Andy Kemish
(Name)

VP Rosemount Analytical Europe
(Function name)

ROSEMOUNT Analytical

EMERSON Process Management

This declaration confirms the compliance with announced directives but does not include the assurance of properties.
The safety and installation instructions of the documentation have to be followed.

EC DECLARATION OF CONFORMITY

Document number: RAE/MLT 2-E8
Date: February 2008

We,

Emerson Process Management GmbH & Co. OHG

located at

Industriestrasse 1, D-63594 Hasselroth, Germany

declare under our sole responsibility that our gas analyzer, type

MLT 2

to which this declaration relates is in conformity with the provisions of:

89/336/EEC **EMC Directive** **(changed by directive 91/263/EEC 92/31/EEC and 93/68/EEC)**
with the application of the harmonized standards:

EN 61326-1:1997 + A1:1998 + A2:2001 + A3:2003	Electrical equipment for measurement, control and laboratory use - EMC requirements

---

73/23/EEC **Low Voltage Directive** **(changed by directive 93/68/EEC)**
with the application of the harmonized standards:

EN 61010-1:2001	Safety requirements for electrical equipment for measurement, control and laboratory use Part 1: General requirements

---

97/23/EC **Pressure Equipment Directive**
This analyzer has been designed and manufactured considering article 3, paragraph 3 of the above mentioned directive and therefore CE marking does not refer to this directive.

MLT 2 does include any general purpose field housing (one-piece or two-piece) based on NGA analyzers.

Hasselroth, February 2008

.....
(Signature)

Andy Kemish
(Name)

VP Rosemount Analytical Europe
(Function name)

ROSEMOUNT Analytical

EMERSON Process Management

This declaration confirms the compliance with announced directives but does not include the assurance of properties.
The safety and installation instructions of the documentation have to be followed.

EC DECLARATION OF CONFORMITY

Document number: RAE/MLT 3-E8
Date: February 2008

We,

Emerson Process Management GmbH & Co. OHG

located at

Industriestrasse 1, D-63594 Hasselroth, Germany

declare under our sole responsibility that our gas analyzer, type

MLT 3

to which this declaration relates is in conformity with the provisions of:

89/336/EEC **EMC Directive** **(changed by directive 91/263/EEC 92/31/EEC and 93/68/EEC)**
with the application of the harmonized standards:

EN 61326-1:1997 + A1:1998 + A2:2001 + A3:2003	Electrical equipment for measurement, control and laboratory use - EMC requirements

---

73/23/EEC **Low Voltage Directive** **(changed by directive 93/68/EEC)**
with the application of the harmonized standards:

EN 61010-1:2001	Safety requirements for electrical equipment for measurement, control and laboratory use Part 1: General requirements

---

97/23/EC **Pressure Equipment Directive**
This analyzer has been designed and manufactured considering article 3, paragraph 3 of the above mentioned directive and therefore CE marking does not refer to this directive.

MLT 3 does include any thermostated 19" NGA analyzer with internal power supply in the variants table housing (T), internal module (A), external module (M) or rack installation (R), each standard or extended (E) housing.

Hasselroth, February 2008

.....
(Signature)

Andy Kemish
(Name)

VP Rosemount Analytical Europe
(Function name)

ROSEMOUNT Analytical

EMERSON Process Management

This declaration confirms the compliance with announced directives but does not include the assurance of properties.
The safety and installation instructions of the documentation have to be followed.

EC DECLARATION OF CONFORMITY

Document number: RAE/MLT 4-E9
Date: February 2008

We,

Emerson Process Management GmbH & Co. OHG

located at

Industriestrasse 1, D-63594 Hasselroth, Germany

declare under our sole responsibility that our gas analyzer, type

MLT 4

to which this declaration relates is in conformity with the provisions of:

89/336/EEC **EMC Directive** **(changed by directive 91/263/EEC 92/31/EEC and 93/68/EEC)**
with the application of the harmonized standards:

EN 61326-1:1997 + A1:1998 + A2:2001 + A3:2003	Electrical equipment for measurement, control and laboratory use - EMC requirements

---

97/23/EC **Pressure Equipment Directive**
This analyzer has been designed and manufactured considering article 3, paragraph 3 of the above mentioned directive and therefore CE marking does not refer to this directive.

This document covers all MLT 4 gas analyzer variations.

Hasselroth, February 2008

.....
(Signature)

Andy Kemish
(Name)

VP Rosemount Analytical Europe
(Function name)

ROSEMOUNT Analytical

EMERSON Process Management

This declaration confirms the compliance with announced directives but does not include the assurance of properties.
The safety and installation instructions of the documentation have to be followed.

EC DECLARATION OF CONFORMITY

Document number: RAE/MLT 5-E8
Date: February 2008

We,

Emerson Process Management GmbH & Co. OHG

located at

Industriestrasse 1, D-63594 Hasselroth, Germany

declare under our sole responsibility that our gas analyzer, type

MLT 5

to which this declaration relates is in conformity with the provisions of:

89/336/EEC **EMC Directive** **(changed by directive 91/263/EEC 92/31/EEC and 93/68/EEC)**
with the application of the harmonized standards:

EN 61326-1:1997 + A1:1998 + A2:2001 + A3:2003	Electrical equipment for measurement, control and laboratory use - EMC requirements

---

73/23/EEC **Low Voltage Directive** **(changed by directive 93/68/EEC)**
with the application of the harmonized standards:

EN 61010-1:2001	Safety requirements for electrical equipment for measurement, control and laboratory use Part 1: General requirements

---

97/23/EC **Pressure Equipment Directive**
This analyzer has been designed and manufactured considering article 3, paragraph 3 of the above mentioned directive and therefore CE marking does not refer to this directive.

MLT 5 does include any high temperature version based on MLT analyzers.

Hasselroth, February 2008

.....
(Signature)

Andy Kemish
(Name)

VP Rosemount Analytical Europe
(Function name)

ROSEMOUNT® Analytical

EMERSON. Process Management

This declaration confirms the compliance with announced directives but does not include the assurance of properties.
The safety and installation instructions of the documentation have to be followed.

Instruction Manual
90002929
04/2008

NGA 2000 MLT Hardware

NGA 2000 MLT Hardware

Instruction Manual
90002929
04/2008

WORLD HEADQUARTERS
ROSEMOUNT ANALYTICAL EUROPE
Emerson Process Management
GmbH & Co. OHG
Industriestrasse 1
63594 Hasselroth
Germany
T 49 6055 884 0
F 49 6055 884209

Emerson Process Management
Rosemount Analytical Inc.
6565 P Davis Industrial Parkway
Solon, OH 44139 USA
T 440.914.1261
Toll Free in US and Canada 800.433.6076
F 440.914.1271
e-mail: gas.csc@EmersonProcess.com
www.raihome.com

GAS CHROMATOGRAPHY CENTER
AND LATIN AMERICA
Emerson Process Management
Rosemount Analytical Inc.
11100 Brittmoore Park Drive
Houston, TX 77041
T 713 467 6000
F 713 827 3329

EUROPE, MIDDLE EAST AND AFRICA
Emerson Process Management
Shared Services Limited
Heath Place
Bognor Regis
West Sussex PO22 9SH
England
T 44 1243 863121
F 44 1243 845354

ASIA-PACIFIC
Emerson Process Management
Asia Pacific Private Limited
1 Pandan Crescent
Singapore 128461
Republic of Singapore
T 65 6 777 8211
F 65 6 777 0947
e-mail: analytical@ap.emersonprocess.com

© Emerson Process Management GmbH & Co. OHG 2007

EMERSON
Process Management